Republic of the Philippines
Department of Environment and Natural Resources
Visayas Avenue, Diliman, Quezon City
Tel Nos. (632) 929-6626 loc. 2113; 1070 Fax (632) 926-2567
E-mail: officeofuseccuna@denr.gov.ph; website www.denr.gov.ph

MEMORANDUM

TO : **THE REGIONAL EXECUTIVE DIRECTOR**
DENR-Region IV-B MIMAROPA
1515 Roxas Blvd., Ermita, Manila

FROM : **THE UNDERSECRETARY**
Field Operations – Luzon, Visayas and Environment

SUBJECT : **REQUEST OF MR. DEMETRIO G. WAGWAG OF THE NATIONAL LEGAL PROCESS OF APPEAL (NALEPAP) FOR THE GENERAL VERIFICATION SURVEY AND INVENTORY ON THE ALLEGED DISPUTED LAND IN CORON, PALAWAN**

DATE : MAR 0 9 2023

This pertains to the undated letter Mr. Demetrio G. Wagwag, Founder/President of NALEPAP, addressed to the Presidential Action Center, Office of the President, received by this Office dated 16 February 2023, regarding the above-mentioned subject.

May we refer the matter for your comments in accordance with the existing laws, rules and regulations. Directly reply to the parties concerned and copy furnish this Office of the action taken citing document tracking number DENRCO-ASRMD-2022-031488 for record and monitoring purposes.

For compliance.

ATTY. JUAN MIGUEL T. CUNA, *CESO I*

Encls.: as stated

cc: **Mr. Demetrio G. Wagwag**
Lapu-Lapu T., Brgy. Mandaragat
Puerto Princesa City

Presidential Complaint Center
Office of the President, Malacañang, Manila

Office of the Secretary
DENR

Republic of the Philippines
Department of Environment and Natural Resources
Document Action Tracking System
Document Routing Slip

Document No: DENRCO - AS RMD-2022-031488 **Print Date:** Tuesday, December 13, 2022

Sender: DEMETRIO G. WAGWAG

Address: SITIO TABLA BRGY. BORAC CORON PALAWAN

Subject LETTER DTD 12/13/2022 UNDTD LETTER ON LAND PROBLEM OF LAURENTE B. TAN LOVATED AT SITIIO BAYO BRGY. TAGUMPAY CORON PALAWAN (W/ ATTACHMENTS)

Addressee(s): Office of the Secretary (DENRCO - OSEC)

CC Addressee(s):

Date/Time Received: 12/13/2022 11:09:00 AM

ROUTING AND ACTION INFORMATION				
FROM	DATE/TIME RECEIVED	FOR/TO	DATE/TIME RELEASED	ACCEPTANCE REMARKS/ACTION REQUIRED/TAKEN REMARKS/STATUS
	12/13/2022 11:13:30 AM	DENRCO - AS RMD		
DENRCO - AS RMD		DENRCO - OSEC	12/13/2022 11:13:41 AM	

CARO
12-13-22
4pm

BF NM 12-13-22
CL 12-20-22

REFERRED TO OUFO LUE
FOR APPROPRIATE ACTION.
DIR JOEMAR PEREZ
OFFICE OF THE SECRETARY
Date: 2/8/23

OSEC
21577

Atty Reely
21523

Atty Gong 21623 please refer to RPB, for comments & parties concerned.

Encoder: Zipagan, Meligyn A.

-198

5488

190X

Department of Environment & Natural Resources
Records Management Division
RECEIVED
DEC 13 2022
Received by: Time:

Republika ng Pilipinas
Lalawigan ng Palawan
Sitio Bayi, Brgy. Tagumpay
Coron, Palawan

(Kapayapaan)

Office of the President
Presidential Action Center
(PAC)
Tahanan ng Masa Bldg.
Malacañang, Manila, Philippines

Dear Sir, Mam,

Isang maaliwalas na araw ng pagbati para sa lahat ng ating mga butihing lingkod bayan ng ating Bansang Pilipinas. Ang simoy ng kapaskuhan ay nagdulot hatid ng pananabik na walang hanggang kasiyahan sa bawat puso ng mamamayang Pilipino upang salubungin ang muling pagsilang ng ating dakilang manunubos, ang makahulugang "muling pagsilang" ay napakalalim at hindi po maarok, ang lubos na pang-unawa "kung bakit may paskong darating sa bawat taon, sa bawat buhay ng Pilipino. Upang ang isang napakahalagang ala-ala ng ating dakilang lumikha ay kailanman ay hindi natin pwedeng malilimutan habang buhay. Sir, Mam, ikaw at ako at ang buong sambayanang Pilipino ay may partisipasyon upang magkaroon ng tunay na "pasko" sa diwa, sa puso't isipan ng bawat tao sa mudong ibabaw.

Sir, Mam ang National Legal Process of Appeal (NALEPAP) ay "babangon muli" (BBM) upang iparating sa ating mahal na Pangulo ang naging kaganapan sa ating kapaligiran, sa lahat ng sulok ng ating bansa, sa serbisyo ng ating mga butihing kawani, Lokal man at National. Minarapat po ng "NALEPAP" na iparating sa inyong mga tanggapan ang mga karaingan ng ating maliliit at mahihirap na mamamayan, ang pagyurak at pang-aapi ng mga maimpluwensiyang mga kawani ng National Department at lalo mas higit sa kaalaman ng ating butihing Pangulo Ferdinand Romualdez Marcos Jr. hindi po sana ito makakarating sa inyong kaalaman, mahal naming Pangulo "BONG-BONG MARCOS" kung ang Lokal na pamahalaan ay may pantay-pantay na pagpapatupad ng batas mahirap o mayaman, maimpluwensiya man o mangmang "RIGHT JUSTICE MUST PREVAIL"

Sir, Mam, ang panlupang suliranin ito ay masusing pinag-aralan ng "National Legal Process of Appeal" (NALEPAP) upang magkaroon ng kaagarang "SOLUSYON" Sir, Maam, hinihiling po ng NALEPAP sa National Department na sana masakatuparan na ang matagal ng minimithing GENERAL VIRIFICATION SURVEY AND INVENTORY sa nasabing pinagtatalunang lugar. RE: SURVEY OCT# 316 para iwasan ang pagkam-kam ng lugar dito sa aming bayan ng Coron at sa aming lalawigan ng Palawan.

REPUBLIC OF THE PHILIPPINES
PROVINCE OF PALAWAN

NATIONAL LEGAL PROCESS OF APPEAL

National Legal Process of Appeal
Federation Puerto Princesa City Inc.
SEC REGISTRATION NO. CN 20200000279
VILLA MANUEL SUBDIVISION
BRGY. SAN MANUEL PUERTO PRINCESA
CITY 5300

BRO. DEMETRIO B. WAGWAG
Atis Road, Purok Matapat, Bgy. San Jose
Puerto Princesa City

REPUBLIC OF THE PHILIPPINES
SECURITIES AND EXCHANGE COMMISSION
Ground Floor, Secretariat Building,
PICC Complex, City of Pasay, Metro Manila

COMPANY REG. NO.: CN202000000279

CERTIFICATE OF INCORPORATION

KNOW ALL PERSONS BY THESE PRESENTS:

This is to certify that the Articles of Incorporation and By-Laws of:

NATIONAL LEGAL PROCESS OF APPEAL OF FEDERATION PUERTO PRINCESA CITY (NALEPAF), INC.

were duly approved by the Commission on this date upon the issuance of this Certificate of Incorporation in accordance with the Revised Corporation Code of the Philippines (Republic Act No. 11232), which took effect on February 23, 2019 and copies of said Articles of Incorporation and By Laws are hereto attached.

This Certificate grants juridical personality to the corporation but does not authorize it to issue, sell or offer for sale to the public, securities such as but not limited to, shares of stock, investment contracts, debt instruments and virtual currencies without prior Registration Statement approved by the Securities and Exchange Commission; nor to undertake business activities requiring a Secondary License from this Commission such as, but not limited to acting as: broker or dealer in securities, government securities eligible dealer (GSED), investment adviser of an investment company, close-end or open-end investment company, investment house, transfer agent, commodity/financial futures exchange/broker/merchant, financing/lending company, and time shares/club shares/membership certificate issuers or selling agents thereof; nor to operate a fiat money to virtual currency exchange. Neither does this Certificate constitute a permit to undertake activities for which other government agencies require a license or permit.

This Certificate **DOES NOT AUTHORIZE INVESTMENT SOLICITATION AND INVESTMENT-TAKING WITHOUT A SECONDARY LICENSE FROM THIS COMMISSION.**

As a registered corporation, it shall submit annually to this Commission the reports indicated at the back of this certificate.

IN WITNESS WHEREOF, I have hereunto set my hand and caused the seal of this Commission to be affixed to this Certificate at Ground Floor, Secretariat Building, PICC Complex, City of Pasay, Metro Manila, Philippines, this day of 24 January Twenty Twenty.

GERARDO F. DEL ROSARIO
Director
Company Registration and Monitoring Department

For SEC use only
SRC120 (PSIC as reserved)

DOCUMENTARY STAMP TAX PAID

REPUBLIKA NG PILIPINAS
LALAWIGAN NG PALAWAN
POBLACION 2 CORON. PALAWAN
"KAPAYAPAAN"
ASSESSMENT PROGRAMING

Thru Heiresses of Historical **Title OCT** Number **316** in the name of **LAURENTE SANDOVAL** Now, **LAMENTE SANDOVAL** as per record shows us our supporting document in so many years passed for **LEGAL PURPOSES** only. Exercising my little knowledge about my historical **MOMENTOM** I would like more their knowledge to whom, readers of my summarize letter must reach into fall understanding ang conclusion of the real furthermore Its better I will put my writing in one PILIPINO DIALEC to make it sufficient in qualities as **PEACE** and **HUMANETARIAN** procedure that **WILL OF OUR ALMIGHTY CREATOR, LOVINGLY** each other.

Una po sa lahat at bago lumawig pa ang masalimooot na adhikain tungo sa aking pagdulog Sir, Maam taos puso akong bumabati sa inyo "**OFFICE OF THE PRESIDENT, PRESIDENTIAL ACTION (PAC)** at iba pang sangay na tanggapang National at Local Government. Ang aking paghingi ng paumanhin, kung ano man ang maging kaganapan sa aming hinawang pagdulong sa kataastaasang **PRESIDETIAL** ng ating mga batas ng ating pambansang **PILIPINAS.**

Ako po ay si Ginoong **LAURENTE BAGALAY TAN,** may sapat na edad ng 62, **SENIOR CITIZEN** taong **1960 AGES DOESENT MATTER** po SIR/MAAM pwede pa. 'HEH. Nais ko po na maging **RELAX"** lang po ako sa pagharap ng anomang pagsubok na ng butihing may kapal na lutasin ko na may kababaang loob upang maging ako na ang pagkakataong umakyat para magtagumpay na ayon lang sa kanyang kalooban na syang masususnod.

Ang kahapong nagdaan sa aking katandaan ay isang alaala na hindi ko malilimotan ay ang pagbabalik tanaw ng aking kabataan noon na sya kong naging karansan kaya SI/MAAM sino ako na hindi ko ibahagi ang aking munting kaalama? Ang aking naging kaugnayan sa pagaari ng aking nasabing lupain na may **TITULO NA OCT NUMBER 316** ay kailangan kong bigyan ng ibayong pansin para mabigyan ng kasagutan ang madsalimoot kung surilanin sa lupang pinagtatalunan naming naiwang tagapagmana. Ito po SIR/MAAM ay kailangan kong kaagarang masaayos sa pamamagitan ng pagkakaisa **(UNITY TEAM)** higit sa lahat ay ang pagsunod sa mga patakaran na pinapairal sa ating mga BATAS'. BATAS ng ating constitution ng ating bansang **PILIPINAS' RIGTH JUSTICE MUST PREVAIL."**

Bilang isa sa mga tagapagmana ng aming ninunu "**LAMENTE SANDOVAL & JOSEFA DACUNNON, ITO PO ANG "LIST OF ORIGIN** ang pinagmulan ng aming salin lahi.

Minarapat ko po SIR/MAAM na makipagugnayan ako sa ibat iba pang tagapagmana para maging legal ang aking Karapatan tomulong para maiwasan ang walang kabulohang naming pagtatalo nagkaisa po kami na magkaroon ng **GENERAL VERIFICATION SURVEY IN INVENTORY** request sa **NATIONAL DE[PARTMENT** ng ating mga " **LEGAL NA LECINSYADONG GOEDETIC ENGINEER** na syang gaganap sa aming lugar na Pag SURVEY upang maiwasan ang pagtatalo naming mga kamag anakan lahing nagmula pa sa aming ninunu **LAMENTE SANDOVAL AT JOSEFA DACUNNON** tanging dalangin namin SIR/MAAM sampo ng iba ko pang kamag-anakan na magkakaroon ng kaliwanagan sa madaling panahon. Sa lalo kong kadagdagan magamit namin bilang supporting document?

1.Testimunial Summarized Letter from **MARJORIE ECHAGUE DADAYA** (see photo copy attached)
2. Testimunial Summarized Letter – from **Ms. ELLEN SANDOVAL CUSTODIO-PAULO** (see photo copy attached)
3. **ELLEGAL PENCING** na ginawang **ENVOLVED PERSONNEL** supported by **PNP CORON** ETC- (see photo copy attached)

Wala po kaming tanging hangad, ay ang legal na kaparaanan lamang SIR/MAAM GOD BLESS

Lubos na Gumagalang at nagpapsalamat,

MR. LAURENTE B. TAN
"ASSISSTING HIERS"

NATIONAL LEGAL PROCESS OF APPEAL
DATED: ON NOVEMBER 17, 2022
AT POBLACION 2 BARANGGAY, CORON, PALAWAN PHILLIPINES

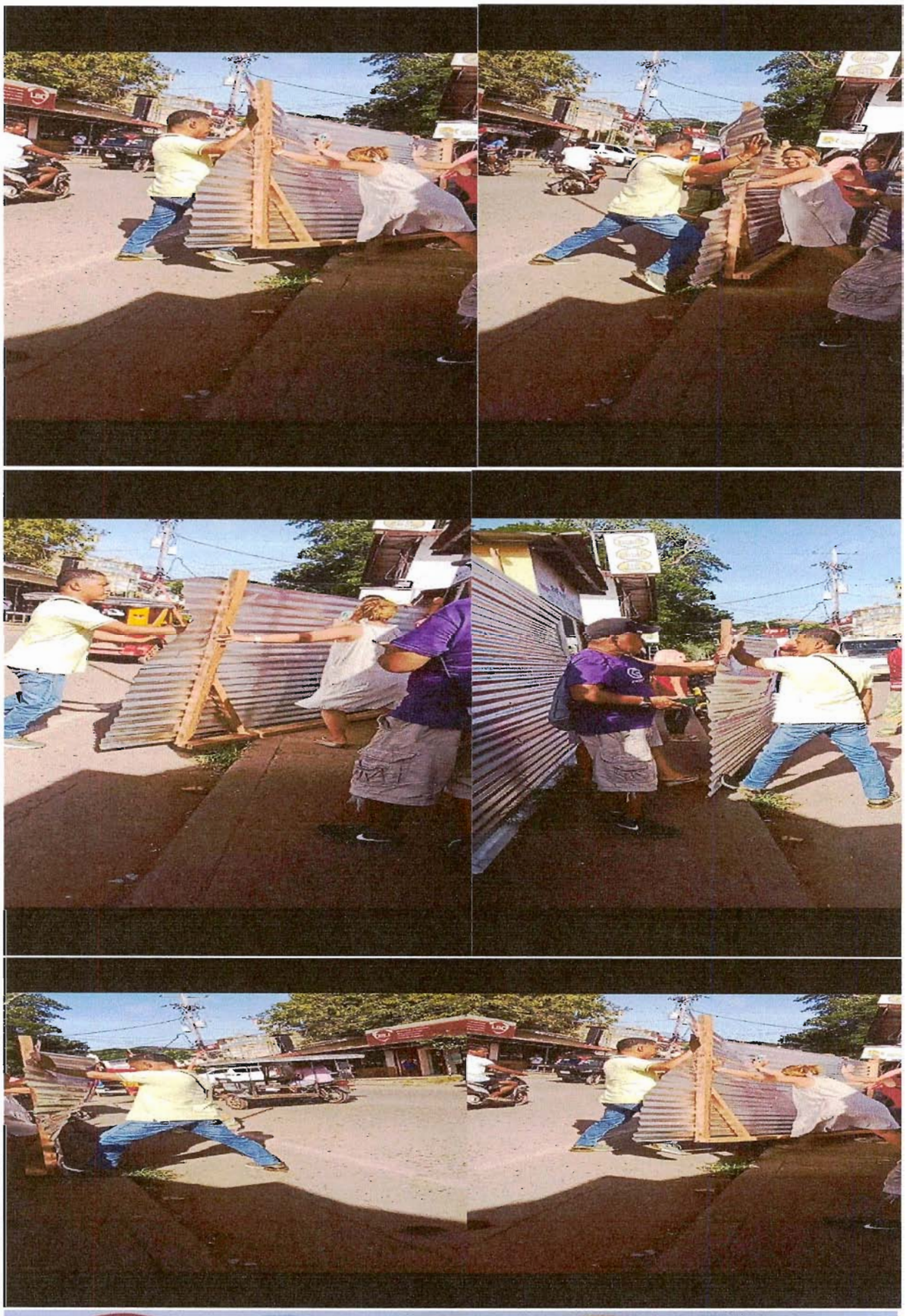

NATIONAL LEAGAL PROCESS OF APPEAL NALEPAP RIGHT JUSTICE MUST PREVAIL PHOTO SHUT ON NOVEMBER 17, 2002 AT BARANGAY POBLACIN 2, CORON, PALAWAN PHILLIPINES

Republic of the Philippines
Department of Environment and Natural Resources
MIMAROPA Region

SEP 3 0 2021

GNG. EMELYN SALAMATIN SALVADOR
Kalye Gasgasan, Purok 1
Brgy. Tagumpay, Coron, Palawan

Ginang Salvador,

Ito po ay kaugnay sa inyong liham na ipinadala sa Office of the President, Presidential Complaint Center, patungkol sa inyong *kahilingan para sa pagsasagawa ng* ***General Verification at Survey Inventory*** *at sa* ***pagpapalabas ng tax declaration*** sa lupain na matatagpuan sa Kalye Gasgasan, Purok 1, Brgy. Tagumpay, Coron, Palawan.

Una, hindi karaniwang ginagawa ng aming opisina ang *General Verification at Survey Inventory* sa isang lugar at ang pagpapalabas ng *Special Order* nang walang sapat na basehan ayon sa mga umiiral na batas at regulasyon.

Ikalawa, maaari kayong pumunta sa CENRO Coron, Palawan na matatagpuan sa Brgy. Poblacion 6, Coron, Palawan upang malaman ang *land classification status* ng nasabing lupa at malaman kung ito ay *agricultural (alienable and disposable)* para maisyuhan ng *certification.* Ang nasabing *certification* ay magiging basehan ng lokal na *assessor* sa pag-isyu ng *tax declaration*. Ngunit kung ang lupa ay hindi *agricultural land,* maaari ninyong malaman sa CENRO kung anong *tenurial instrument* ang nararapat sa lugar, kung naaangkop.

Ikatlo, nais naming iparating na hindi ang DENR (Department of Environment and Natural Resources) ang may awtoridad na mag-isyu ng *tax declaration* kundi ang *Municipal/Provincial Assessor's Office* na may sakop sa lugar kung saan matatagpuan ang nasabing lupa ayon sa *Local Government Code of 1991.*

Ipaaalam namin sa PENRO Palawan ang tungkol sa bagay na ito at padadalhan namin ng kopya ng liham na ito si G. Wagwag at ang iba pang tanggapan na napadalhan ng liham ninyo at ni G. Wagwag.

Kaugnay nito, nararapat lamang na ibalik namin sa inyo ang inyong mga sulat, kasama ng mga nakalakip dito, kung sakaling kakailanganin pa ninyo ang mga ito.

Umaasa ang aming tanggapan na naliwanagan kayo patungkol sa inyong suliranin.

Lubos na gumagalang,

MARIA LOURDES G. FERRER, *CESO III*
Regional Executive Director

Binigyang sipi:

Presidential Complaint Center
(PCC Code No. GL-MLS-11-22-2017-148)
Office of the President
Malacañang, Manila City

The Undersecretary for Field Operations and Environment
(ASRMD-2017-0032616)

Mr. Demetrio Wagwag
Lapu-Lapu St., Brgy. Mandaragat
Puerto Princesa City

PENRO Palawan

CENRO Coron, Palawan

Doc ID 70723

ARD-MS/LD

1515 L. & S. Building, Roxas Boulevard, Ermita, Manila 1000
DENR VOIP (632) 82483367/82483468/82493367 local 2717 (Regional Executive Director); 2709 (Legal Division)
Direct Line: (632) 84050157; Facsimile: (632) 84050046
Website: https://mimaropa.denr.gov.ph
Email: mimaroparegion@denr.gov.ph; denr4blegal@gmail.com

Republic of the Philippines
Department of Environment and Natural Resources
MIMAROPA Region

SEP 30 2021

MEMORANDUM

TO : The PENR Officer
Palawan

FROM : The Regional Executive Director

SUBJECT : **REQUEST OF MS. EMELYN SALAMATIN SALVADOR AND MR. DEMETRIO WAGWAG OF THE NATIONAL LEGAL PROCESS OF APPEAL (NALEPAP) FOR THE CONDUCT OF GENERAL VERIFICATION AND SURVEY INVENTORY AND ISSUANCE OF TAX DECLARATION**

This refers to the compiled letters of Ms. Emelyn Salamatin Salvador and Mr. Demetrio Wagwag of the NALEPAP regarding their request for the conduct of General Verification and Survey Inventory and issuance of tax declaration over a parcel of land situated at Kalye Gasgasan, Purok 1, Brgy. Tagumpay, Coron, Palawan.

In the attached letter dated 30 SEP 2021 addressed to Ms. Emelyn Salamatin Salvador, we informed her that our Office does not regularly conduct a *General Verification and Survey Inventory*, as well as the issuance of a Special Order, without a valid reason in accordance with law and regulations. Further, we advised her that she may proceed to the CENRO Coron, Palawan to find out whether the subject land is agricultural (alienable and disposable) so that a certification may be issued as basis for the Municipal/Provincial Assessor to issue a tax declaration. On the other hand, if the land is not agricultural, the CENRO should determine whether a tenurial instrument may be applied for, if applicable.

Also attached is the letter addressed to Mr. Wagwag, which is self-explanatory.

In relation thereto, may we request that your Office cause the delivery of the attached letters as well as the compiled documents to Ms. Salvador and Mr. Wagwag and submit a report on the service and receipt by the addressees thereof for record purposes.

MARIA LOURDES C. FERRER, *CESO III*

Copy furnished:

Mr. Demetrio Wagwag
Lapu-Lapu St., Brgy. Mandaragat
Puerto Princesa City

Mr. Emelyn Salamatin Salvador
Kalye Gasgasan, Purok 1
Brgy. Tagumpay, Coron, Palawan

CENRO Coron, Palawan

ARD-MS/LD

Department of Environment and Natural Resources
MIMAROPA Region
Doc ID: 70723

1515 L. & S Building, Roxas Boulevard, Ermita, Manila 1000
DENR VOIP (632) 82483367/82483468/82493367 local 2717 (Regional Executive Director)
Direct Line: (632) 84050157; Facsimile: (632) 84050046
Website: https://mimaropa.denr.gov.ph
Email: mimaroparegion@denr.gov.ph; denr4blegal@gmail.com

Republic of the Philippines
Department of Environment and Natural Resources
MIMAROPA Region

SEP 3 0 2021

G. DEMETRIO D. WAGWAG
National Legal Process of Appeal (NALEPAP)
Lapu-Lapu St., Brgy. Mandaragat
Puerto Princesa City

SUBJECT: KAHILINGAN NI GNG. EMELYN SALAMATIN SALVADOR AT G. DEMETRIO WAGWAG NG NALEPAP UKOL SA PAGSASAGAWA NG GENERAL VERIFICATION AT SURVEY INVENTORY AT SA PAGPAPALABAS NG TAX DECLARATION

Ginoong Wagwag,

Ito po ay kaugnay sa inyong liham na ipinadala sa Office of the President, Presidential Complaint Center, na isinangguni at ipinasa sa aming tanggapan.

Ayon sa ulat ni PENR Officer Eriberto B. Saños noong 24 Pebrero 2020, isang sertipikasyon mula sa *Securities and Exchange Commission* (SEC) noong 30 Septyembre 2019 ang nagpapatunay na ang NALEPAP ay hindi nakarehistro bilang isang korporasyon, samakatuwid, ito ay walang legal na personalidad na kumatawan sa ngalan ng kahit sino sa kahit saan mang tanggapan ng gobyerno.

Dahil dito, at sang-ayon sa mga umiiral na batas at regulasyon, ang aming tanggapan ay hindi maaaring magdinig ng mga suliranin na inyong isinasangguni sa amin nang walang *Special Power of Attorney (SPA)* na nagbibigay ng awtoridad sa inyo upang kumatawan sa ibang tao o grupo.

Kalakip dito ay ang sulat na para kay Mrs. Emelyn Salamatin Salvador kung saan nakasaad ang aming payo tungkol sa mga pwede niyang gawin kaugnay sa usaping ito.

Kaya't nararapat lamang na ibalik namin sa inyo ang inyong mga sulat, na may mga kalakip, kung sakaling kakailanganin ninyo ang mga ito.

Umaasa ang aming tanggapan na naliwanagan kayo patungkol sa inyong suliranin.

Lubos na gumagalang,

MARIA LOURDES G. FERRER, *CESO III*
Regional Executive Director

Binigyang sipi

Presidential Complaint Center
(PCC Code No. GL-MLS-11-22-2017-148)
Office of the President
Malacañang, Manila City

The Undersecretary for Field Operations and Environment
(ASRMD-2021-08326616)

Gng. Emelyn Salvador
Kalye Gaggasan, Purok I
Brgy. Tagumpay
Coron, Palawan

PENRO Palawan
CENRO Coron, Palawan
ARD-MS/LD

Doc ID: 76723

1515 L. & S. Building, Roxas Boulevard, Ermita, Manila 1000
DENR VOIP (632) 824 83367/82483468/82493367 local 2717 (Regional Executive Director), 2709 (Legal Division)
Direct Line: (632) 84 050157, Facsimile: (632) 84050046
Website: https://mimaropa.denr.gov.ph
Email: mimaroparegion@denr.gov.ph; denr4blegal@gmail.com

Republic of the Philippines
Department of Environment and Natural Resources
Community Environment and Natural Resources Office
Barangay 5, Calamianes Island, Coron, Palawan
Telephone No. +63 917 504 2633
E-mail:cenrocoron@denr.gov.ph Website: www.denr.gov.ph

August 9, 2022

MR. DEMETRIO WAGWAG
Founder President
NALEPAP
So. Benecan, Brgy San Nicolas, Coron Palawan

Dear Madam **Wagwag:**

Greetings from the Office of Community Environment and Natural Resources, Calamianes Island, Coron Palawan.

This pertains to your undated letter address to the Office of the President, Presidential action Center (PAC) Tahanan ng Masa Building Malacañang, Manila Philippines recived on June 22, 2022. On your letter, you are requesting for the General Verification and Issuance of Special Order (RSO) to deal with land conflict in So. Benecan, Brgy. San Nicolas, Coron Palawan.

Please be informed that the request of Agri-Farmer, Fisher Folks Association Incorporated headed by Mrs. Labajo for general survey has already been acted by this office and the following findings were disclosed;

1. During the conduct of investigation/verification it was found that the subject area requested by Agri-Farmer, Fisher Folks Association Incorporated headed by Mrs. Labajo for general survey is within the jurisdiction of the BPR.

2. On the issue of emergence of titled lot on the area with TCT# 6498, records shows that same concern were brought to this Office and it was already investigated with reference to the memorandum report dated June 01, 2022;

3. Regarding occupation in the area records of this Office shows that only 19 personalities was found occupying the area based on the conducted profiling activity conducted by the BPRMO and CENR Office on 2016 to 2017;

4. Lastly, regarding to the National Legal Process of Appeal of Federation Puerto Princesa City (NALEPAF) based from records of the CENRO in reference to the memorandum dated February 24, 2020 of the OIC-PENRO, Palawan for the Regional Executive Director of DENR-MIMAROPA the said group was declared a nuisance group and therefore all communication from Mr. Wagwag and company be no longer entertained.

Regarding to your request may we informed you that that the issuance of Regional Special Order (RSO) is not issued by this office. Furthermore, may we reiterate that the subject area requested is within the jurisdiction of the BPR, as per Presidential Proclamation No. 1387 series of 1975, **BPR is withdrawn from sale, settlement, disposition, exploration and exploitation, and reserved for pasture purposes**. Violation of such law is tantamount to filing of case on court if warrant.

Please be guided accordingly.

Very Truly Yours,

RODNEY G. VERIAN
OIC, CENRO

CENRO, DEAR
SERIAL No. 2708
RELEASED
DATE: 8-10-22
BY:

November 28, 2022

OFFICE OF THE PRESIDENT
PRESIDENTIAL ACTION CENTER
TAHANAN NG MASA BUILDING
MALACAÑANG MANILA, PHILIPPINES

SIR,

KAPAYAPAAN!!

Ako si ELLEN SANDOVAL CUSTODIO PAULO, Isang SOLO PARENT at may apat (4) na anak. Ang aking mga magulang ay sina RENATO CUSTODIO at JOCELYN SANDOVAL CUSTODIO ay mga LEHITIMONG TAGA CORON, at ANG MGA NINUNO ko ay mga tubong Coron, Palawan dito na sila ipinanganak, nagkaaasawa, nagkaanak, at namatay.

Ikalawa ako sa anim kaming magkakapatid, ako ay nasa 45 taong gulang na, ang mga NINUNO KO ay nandito na sa CORON, PALAWAN mahigit sa 80 taon na ang nakararaan at ang kanilang lupang sininop ay ang kinatitirikan ng aking TINDAHAN, TINDAHAN NG KAPATID KO at ang TALYER na magpahanggang ngayong 2022 ay kami pa rin ang naninirahan.

Nais kong idulog ang aking PROBLEMA sa FENCING PERMIT na inisyu ng aming MUNICIPAL ENGINEER (CORON, PALAWAN) na si IKE PARANGUE na PABOR kay ERIC ECHAGUE, dahil sa FENCING PERMIT na naisyu NABAKOD O SA TAMANG PAGLALARAWAN AY NAIPASARADO ang PINAPAUPAHAN KONG TINDAHAN, KUNG SAAN ITO LAMANG ANG TANGI KONG PINAGKUKUNAN NG KITA PARA SA PAG-AARAL AT PANG-ARAW-ARAW NAMING PANGANGAILANGAN NG MGA ANAK KO NA MGA MENOR DE EDAD PA LAMANG.

Kasama sa sulat na ito ang LARAWAN NG PAGKAKABAKOD NG AKING TINDAHAN at makikita sa LARAWAN NA MAY ***HUMAN RIGHTS VIOLATION*** sa pangyayari, ito ang nais kong ilapit sa inyong TANGGAPAN na tulungan akong MATANGGAL ANG PAGKAKAHARANG SA AKING TINDAHAN sa pamamagitan ng PAGREVOKE NG PERMIT NA NAISYU NG aming MUNICIPAL ENGINEER NA SI IKE PARANGUE, sapat na siguro na dahilan ang paglabag sa HUMAN RIGHTS para mapawalang bisa ang nasabing PERMIT, sapagkat TAO kami, na may mga karapatan, ito ang aking ipinaglalaban sa simula pa lang ng kanilang attempt 2019, ngunit hindi kami pinapakinggan ng mga nasa POSISYON.

At sa sitwasyon ngayon wala pa naman ni KATITING NA KARAPATAN SI ERIC ECHAGUE sa lupang kinatitirikan ng aking TINDAHAN kahit pagbasehan pa ang papel na mayroon siya, NAGPASURVEY siya ng LUPA na may titulong 316 na wala man lang pag-imbeta sa AMIN NA KATABING LUPA upang ma-witness kung saan ang mga boundaries.

Mayroon akong TAX DECLARATION at LAND STATUS na hawak, na galing sa DENR na nakapangalan ang LUPA na kinatitirikan ng aking tindahan sa aking AMA na si RENATO CUSTODIO (photocopy of land and tax attached) at hindi ito sakop ng LUPANG MAY TITULONG 316 na aming katabing lupa na siya (ERIC ECHAGUE)

ayang pinipilit na sakop pa ng LUPANG MAY TITULONG 316 AT hindi pa naman si ERIC ECHAGUE ang nagmamay-ari dahil wala pa itong pagsasalin mula sa ORIGINAL NA MAY-ARI.

Ilang beses na kaming sumulat ng REKLAMO kay ENGR. PARANGUE (MUNICIPAL ENGINEER) sa una nilang attempt ng PAGBABAKOD TAON 2019, NAISYUHAN DIN SILA, ngunit wala naman REVOCATION na nangyari, humantong pa ang aming sulat-REKLAMO sa OMBUDSMAN (PHOTOCOPY OF OMBUDSMAN REPLY ATTACH), ganun din sa HUMAN RIGHTS kung saan may representative pa ang HUMAN RIGHTS na pumunta rito, ngunit wala pa din kaming natanggap na REVOCATION, hindi nga lang natuloy ang kanilang PAGBABAKOD noong 2019, ngunit ngayong SECOND ATTEMPT 2022 natuloy na dahil hindi naman kami na-inform o wala kaming paghaharap sa BARANGGAY ng ERIC ECHAGUE upang ipaglaban ang aming KARAPATAN SA LUPANG AKING PAG-AARI, tulad din ng naunang PAGBIBIGAY NG BARANGGAY CERTIFICATION basta nagbigay na lang si BARANGGAY KAPITAN OSCAR AMIT PABOR KAY ERIC ECHAGUE NG BARANGGAY CERTIFICATION kahit alam niyang may mga LEHITIMONG NAKATIRA at naghahanapbuhay sa LUPANG NAIS BAKURIN NG MGA TAONG WALA PA NAMANG KARAPATAN SA LUPA NA ANG PANGALAN AY ERIC ECHAGUE.

PALAISIPAN SA AKIN KUNG BAKIT BINIGYAN NG FENCING PERMIT SI ERIC ECHAGUE KAHIT NA MAY MGA TAONG NAKATIRA AT MAY AKTIBONG NAGHAHANAPBUHAY SA NASABING LUPANG INAANGKIN NI ERIC ECHAGUE, WALA PA MAN DIN SIYANG (ERIC ECHAGUE) AWA O PAKIALAM KUNG HINDI MABUTI ANG DULOT NITO O MAGDUDULOT NG PAGKAWALA NG HANAPBUHAY NG KAPWA NIYA, NA MAAARING MAY MGA BATANG MAGUGUTOM NG DAHIL SA HINDI NA MAKAPAGHANAP BUHAY, DAHIL PINASARADO ANG TINDAHAN NG GANUN-GANUN NA LANG.

KAYA NAIS KO DING ISABAY SA SULAT KONG ITO ANG PAGREREKLAMO SA TATLONG OPISYAL NA NAGING DAHILAN NA MA-ISYU ANG FENCING PERMIT, SILA AY SINA BARANGGAY KAPITAN OSCAR AMIT, MUNICIPAL PLANING DEVELOPMENT COORDINATOR (ZONING) MICHAEL FABABIER AT NAG-APROVED NA SI MUNICIPAL ENGINEER IKE PARANGUE NG MUNICIPAL ENGINEERING.

Inirereklamo ko si BARANGGAY KAPITAN SA PAG-ISSUE NG BARANGGAY CERTIFICATION FOR FENCING PERMIT IN FAVOR OF ERIC ECHAGUE, na wala kaming PAGHAHARAP bilang ako, si ELLEN SANDOVAL CUSTODIO PAULO ang SIYANG LEHITIMONG nagmamay-ari ng TINDAHAN na BINAKOD O PINASARA ni ERIC ECHAGUE na ang hindi namin paghaharap sa TANGGAPAN NG BARANGGAY ang dahilan para hindi ko naipagtanggol ang aking TINDAHAN bilang taong may KARAPATAN at bilang ako ang nagmamay-ari ng nasabing TINDAHAN.

GANUON DIN, INIREREKLAMO KO SI ENP/ENGR. MICHAEL ADRIAN F. FABABIER NG MUNICIPAL PLANNING & DEVE'T COORDINATOR, MUNICIPALITY OF CORON, CORON, PALAWAN ang PAG-ISSUE DIN NG LOCATIONAL CLEARANCE na ISA DIN SA NAGPATIBAY AT dahilan din kung bakit nabigyan si ERIC ECHAGUE NG FENCING PERMIT kahit hindi bakante ang LUPANG NAIS BAKURIN, MAY NANINIRAHAN RITO, at MAY AKTIBONG NAGHAHANAPBUHAY sa nasabing lupa.

at ang NAG-APPROVED NG FENCING PERMIT ni ERIC ECHAGUE NA SI MUNICIPAL ENGINEER IKE PARANGUE sa ikalawang pagkakataon ang siyang pinakanais kong IREKLAMO, sapagkat isa siyang may mataas na pinag-aralan, matalinong tao kaya nga ibinigay sa kanya ang posisyon sapagkat may KAKAYAHAN SIYANG MAKITA ANG TAMA SA MALI, ngunit anong nangyari at ang isang tulad kong SOLO PARENT at siyang inaasahan ng mga anak kong nakadepende sa akin ay TANGGALAN NG KARAPATANG MAGKAROON NG HANAPBUHAY O KITA dahil lamang sa NAIS NG IISANG TAO, ang maangkin ang LUPA without JUDICIAL PROCESS para saaan pa pala ang JUDICIAL SYSTEM natin kung pu-puede pala ang magrelease ng FENCING PERMIT bilang pag-aangkin ng LUPA, kahit PA may mga KARAPATANG MATATAPAKAN tulad ng nangyari sa akin.

SANA MABIGYANG PANSIN AT KONSIDERASYON ANG AKING SULAT BILANG ISANG INANG WALA NG MAKAKAPITAN KUNDI IKAW NA LAMANG MAHAL NAMING PRESIDENTE, ANG NAIS KO LANG NAMAN AY TAHIMIK NA BUHAY KASAMA NG AKING MGA ANAK AT MAKAPAGHANAPBUHAY PARA SA MAGANDANG KINABUKASAN NILA, PAANU KO GAGAWING MAPABUTI ANG KANILANG KINABUKASAN KUNG ANG TANGING PINAGKAKAKITAAN KO AY IPINASARA KAYA MULI KONG BABANGGITIN ANG PAGHINGI KO NG TULONG NA MAALIS ANG PAGKAKAHARANG NG MGA YERO SA AKING TINDAHAN SA PAMAMAGITAN NG REVOCATION NG FENCING PERMIT NI ERIC ECHAGUE, AT MABIGYAN NG KATARUNGAN ANG NANGYARI SA AKIN.

LUBOS NA NAGPAPASALAMAT,

ELLEN SANDOVAL CUSTODIO PAULO
SOLO PARENT

MY PERSONAL ATTACHMENT

SOLO PARENT ID
MY BIRTH CERTIFICATE
MARRIAGE CONTRACT OF MY PARENTS
BARANGGAY CERTIFICATION OF MY ACTUAL OCCUPATION
RENATO CUSTODIO TAX DECLARATION AND LAND STATUS FROM DENR (MY FATHER)
BUSINESS CLEARANCE (MY STORE) FROM BARANGGAY
MAYOR'S PERMIT (MY STORE)
PICTURE OF THE STORE WITH AND WITHOUT FENCE

ATTACHMENT: DOCUMENTS AND CERTIFICATION USED TO APPROVE AND ISSUE THE FENCING PERMIT IN FAVOR OF ERIC ECHAGUE

BARANGGAY CERTIFICATION
LOCATIONAL CLEARANCE
FENCING PERMIT

SPECIAL POWER OF ATTORNEY

KNOW ALL MEN BY THESE PRESENTS:

I, **RENATO P. CUSTODIO, SR.**, Filipino, of legal age, married, and a resident of Barangay 2, Coron, Palawan, do hereby name, constitute and appoint, **ELLEN C. PAULO**, Filipino, of legal age, married, and a resident of Barangay 2, Coron, Palawan, to be my true and lawful attorney-in-fact, to act for me, in my name, place and stead, to do and perform the following acts, deeds, and things, to wit:

1. To occupy and develop a portion of the estate of the late ALIPIO CUSTODIO, representing my aliquot share from the said undivided estate, located at Barangay 2, Coron, Palawan, covered by Original Certificate of Title No. 314;

2. To apply, process and procure the necessary permits or clearances, required or necessary for occupying or developing said parcel of lot;

3. To defend, sue for, and/or recover portion or my entire share against any adverse claimants or occupants;

4. To transact or perform any act which may be relevant or necessary involving said parcel of lot, as if I am present and performing;

5. To sign, swear to, execute, or perform, any act or writing, necessary or required for the accomplishment of the foregoing undertakings.

HEREBY GIVING AND GRANTING unto my said attorney-in-fact full power and authority to do and perform any and every act, and thing, whatsoever, requisite and necessary, to be done in and about the premises, as fully to all intents and purposes, as I might or could lawfully do if personally present, and hereby ratifying and confirming all that my attorney-in-fact shall lawfully do or cause to be done by virtue of these presents.

IN WITNESS WHEREOF, I have hereunto set my hand this _____ day of AUG 0 2 2019 at Coron, Palawan

RENATO P. CUSTODIO, SR.
Principal

ELLEN C. PAULO
Attorney-in-fact

SIGNED IN THE PRESENCE OF:

JENNIFER E. ARTECHE

RICHARD S. VENTURA

ACKNOWLEDGMENT

REPUBLIC OF THE PHILIPPINES)
Coron, Palawan) SS.
X - X

BEFORE ME, this _____ day of AUG 0 2 2019 *at Coron, Palawan, personally appeared RENATO P. CUSTODIO, SR., exhibiting his Voter's ID No. 5309-0020B-A1155RPC10000 as competent evidence of his personal identity. Known to me to be the same person who executed the foregoing instrument and acknowledged to me that the same is his free and voluntary act and deed.*

ATTY. RONALD J. CARANDANG
Notary Public until Dec. 31 2021
PTR No. [illegible] Nov. 27 2018 PALAWAN
IBP No. 057399 Dec. 19, 2018 PALAWAN
Roll No. 50112

RONALD J. CARANDANG NOTARY PUBLIC ROLL NO. 50112

Doc. No. 274;
Page No. 55;
Book No. 84;
Series of 2019.

National Legal Process of Appeal
(NALEPAP)

Photo taken date: November 30, 2022
Bgy. Poblacion 2, Coron, Palawan

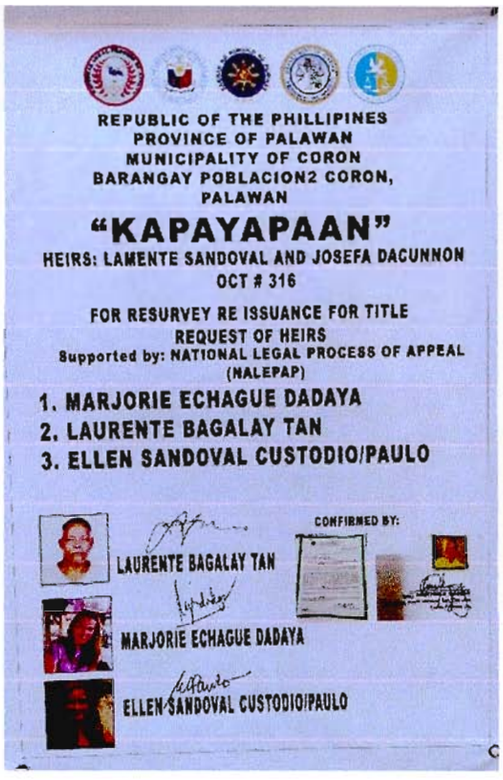

ITO ANG HARAPAN NG AKING

TINDAHAN NG HINDI PA NASA-

SARADUHAN O HINDI PA

NABABAKOD

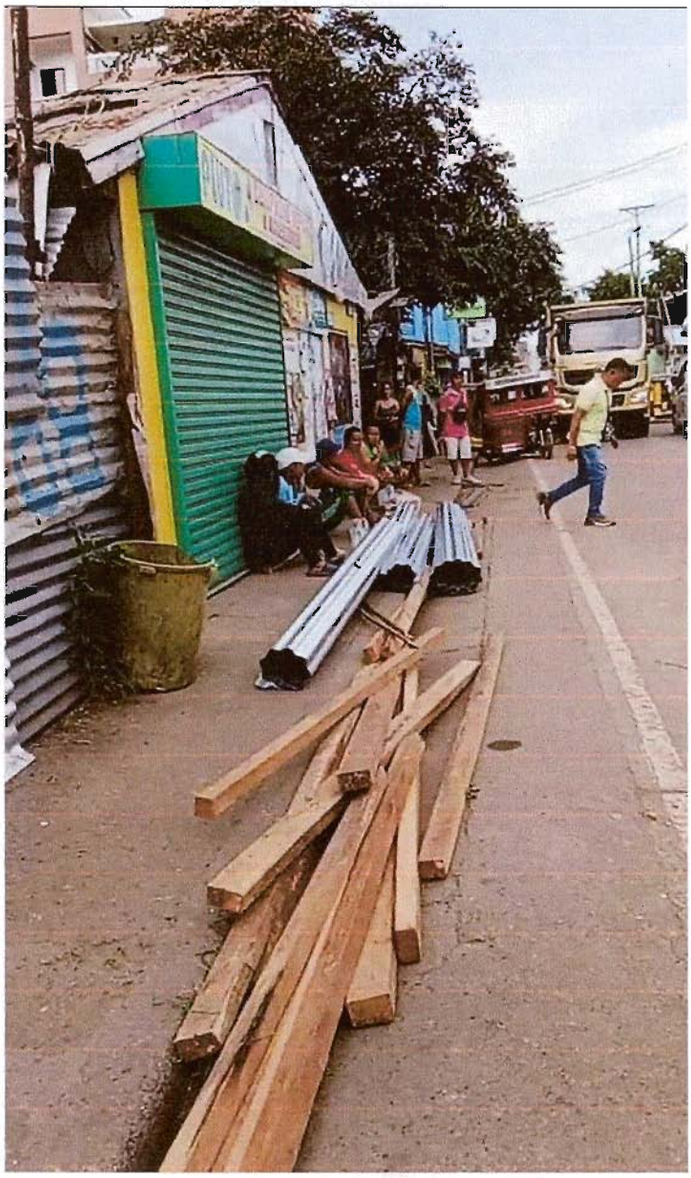

ITO NA ANG HARAPAN NG

AKING TINDAHAN NG

MABAKOD HINDI NAMAN ITO

PAGBABAKOD KUNDI PAGPA-

PASARA NG TINDAHAN

NBC FORM NO. B-03

Republic of the Philippines
Municipality of Coron
Province of Palawan
OFFICE OF THE BUILDING OFFICIAL

FENCING PERMIT

APPLICATION NO. | FP NO. PN04032210005 | BUILDING PERMIT NO.

BOX 1 (TO BE ACCOMPLISHED BY THE OWNER/APPLICANT)

OWNER/APPLICANT LAST NAME	FIRST NAME	M.I.	TIN.
ECHAGUE	ERIC	O	

FOR CONSTRUCTION OWNED BY AN ENTERPRISE: FORM OF OWNERSHIP:

ADDRESS NO., STREET, BARANGAY: BGY. BORAC CITY/MUNICIPALITY: CORON, PAL. ZIP CODE: 5316 TELEPHONE NO.:

LOCATION OF CONSTRUCTION: LOT NO. 68-D BLK. NO. TCT. NO. OCT-316 TAX DEC. NO. C02-0011-C

STREET NATIONAL HIGHWAY CUR. CALOBUROOS BARANGAY POB. 2 CITY/MUNICIPALITY OF CORON

SCOPE OF WORK
- [x] NEW CONSTRUCTION
- [ ] ERECTION
- [ ] ADDITION
- [ ] REPAIR
- [ ] DEMOLITION
- [ ] OTHERS (Specify)

BOX 2
DESIGN PROFESSIONAL, PLANS AND SPECIFICATIONS

VILMA G. GALANO
ARCHITECT OR CIVIL ENGINEER (Signed and Sealed Over Printed Name) Date
Address
PRC No. 0180071 Validity 12/07/24
PTR No. 2493112 Date Issued 6/29/22
Issued at CORON, PALAWAN TIN

BOX 3
FULL-TIME INSPECTOR AND SUPERVISOR OF CONSTRUCTION WORKS

ARCHITECT OR CIVIL ENGINEER (Signed and Sealed Over Printed Name) Date
Address
PRC No. Validity
PTR No. Date Issued
Issued at TIN

BOX 4 (TO BE ACCOMPLISHED BY THE APPLICANT)

APPLICANT: ERIC O. ECHAGUE (Signature Over Printed Name) Date:
Address BGY. BORAC, COR. PAL.
CTC No. 10626939 Date Issued 10/14/2022 Place Issued COR. PAL.

WITH MY CONSENT: LOT OWNER: ERIC O. ECHAGUE (Signature Over Printed Name) Date:
Address BGY. BORAC, COR. PAL.
CTC No. 10626939 Date Issued 10/14/22 Place Issued COR. PAL.

BOX 5

REPUBLIC OF THE PHILIPPINES
CITY/MUNICIPALITY OF CORON, PALAWAN S.S.

BEFORE ME, at the City/Municipality of CORON, PALAWAN on OCT 20 2022 personally appeared the following:

APPLICANT	CTC No.	Date Issued	Place Issued
ERIC O. ECHAGUE	10626939	10/14/2022	COR. PAL.
LICENSED ARCHITECT OR CIVIL ENGINEER (Full-Time Inspector and Supervisor of Fencing Works)	CTC No.	Date Issued	Place Issued

whose signatures appear herein above, known to me the same persons who executed this document and acknowledged to me that the same is their free and voluntary act and deed.

WITNESS MY HAND AND SEAL on the date and place above written.

ATTY. ALBERT C. CARPAEZ
Notary Public for the Province of Palawan
Roll No. 57527
IBP Lifetime Member No. 012852
Notary Public until December
PTR No. 1001438 April 1, 2022
Edgetech Building, National Highway, Barangay IV, Coron, Palawan
Valid until December 31, 2023

Doc. No. 462
Page No. 48
Book No. 85
Series No. 2022

CamScanner

Republic of the Philippines
Province of Palawan
MUNICIPALITY OF CORON
OFFICE OF THE MUNICIPAL PLANNING & DEV'T. COORDINATOR

LOCATIONAL CLEARANCE

Application No. 197-2022
Date of Receipt: October 12, 2022
Paid Under OR NO. 2551104 & 2551028

Decision No.: 196-2022
Date Issued: October 12, 2022
Locational Clearance Fee: P/L 650.00

Name of Applicant Eric O. Echague	Name of Corporation:	
Address/Mobile/Landline No. of Applicant Barangay Borac, Coron, Palawan / 0974-445-0004	Address/Telephone No. of Corporation:	
Name/Type of Project Proposed Concrete Perimeter Fence	Project Location: Barangay Poblacion 2, Coron, Palawan	
Right Over Land Authorized to use the land	Land 132 sq. meters	Fence 50.06 meters

Evaluation of Facts
Site Development Plan, Original Certificate of Title (OCT-316), Extrajudicial Settlement of Estate of the Late Spouses Lamente Sandoval and Josefa Dacunnon by Heirs, Barangay Clearance, Electrical Plan, Estimated Cost and Fully Accomplished Application.

APPROVED: Proposed Concrete Perimeter Fence
Provision of Proper Waste Management and Disposal

CONDITIONS

[/] All conditions stipulated herein form part of this decision and are subject to monitoring.
[/] Non-compliance therein shall be a cause for cancellation or legal action.
[/] The applicable requirement of other government agencies and applicable provisions of existing laws shall be complied with.
[/] No activity other than that applied for and granted shall be conducted within the project site
[/] No major expansion, alteration and/or improvement shall be introduced without prior clearance from the office
[/] This decision shall not be construed as a Certification of Ownership over the parcel(s) of land subject of this decision.
[/] Any misinterpretation, false statement or allegation material to the issuance of this decision shall be sufficient cause for its revocation.
[/] Additional Conditions.
[/] Provision as to setback, yard requirements, bulk, easement, area, height and other restrictions shall strictly conform to the requirements of the national building Code of the Philippines and other related laws
[/] This decision shall be considered automatically revoked if project is not commenced within one (1) year from the date of issue of this decision.

Approved by:

ENP/ENGR. MICHAEL ADRIAN F. FABABEIR, MPA, MAURP
MPDC
ACTING ZONING ADMINISTRATOR

CamScanner

Form No. 103
Land Registration Office Form No. 38

ORIGINAL CERTIFICATE OF TITI

CERTIFICADO ORIGINAL DE TITULO

No. [illegible]

OFFICE OF THE REGISTER OF DEEDS FOR THE PROVINCE OF PALAWAN

OFICINA DEL REGISTRADOR DE TITULOS DE LA PROVINCIA DE

Entered pursuant to the following Decree:
Dictado por virtud del siguiente Decreto

Decree No. [illegible]
Decreto No.

United States of America

ESTADOS UNIDOS DE AMERICA

Philippine Islands
ISLAS FILIPINAS

Court of First Instance, Province of PALAWAN
JUZGADO DE PRIMERA INSTANCIA, PROVINCIA DE

"General Case No. [illegible], G. L. R. O. General Record No. [illegible], having been duly and regularly heard, in accordance with the provisions of law, it is hereby decreed that the conjugal partnership of the spouses, Lazaro Sandoval and Josefa Dacumon, [illegible], of Coron, Province of Palawan, P.I., the owners in fee simple of certain land situated in said Province of PALAWAN, more particularly bounded and described as follows:

A parcel of land (Lot No. 66 of the Cadastral Survey of Coron) with the improvements thereon, situated in the Township of Coron, Province of [illegible], bounded on the NE. by Calle Surgano; on the SE. by Lot No. 69; on the SW. by Lots Nos. 65 and 65-A; and on the NW. by Calle San Jose; beginning at a point marked "1" on plan, being N. 64 deg. W., 144.68 m. from a B. L. L. Monument [illegible] 78 deg. [illegible] point "2"; thence N. 11 deg. 22' W., 49.30 m. to point "3"; thence S. 79 deg. 4' W., 31.92 m. to point "4"; thence S. 20 deg. [illegible] 32.37 m. to point "5"; thence S. 8 deg. 27' E., 14.77 m. to the point of beginning; containing an area of one thousand two hundred twenty-six square meters (1226), more or less. All bearings referred to are indicated on the plan, bearings true; declination 1 [illegible] E. Date of survey, January 3 to January 25, 1913.

DESCRIPTION CONTINUED ON THE REVERSE SIDE—DESCRIPCION CONTINUADA AL CORDO

"Therefore, it is ordered by the Court that said land be registered in accordance with the provisions of the Land Registration Act in the said conjugal partnership of the spouses, Lazaro Sandoval and Josefa Dacumon,

subject, however, to such of the incumbrances mentioned in article [illegible] said Law as may be subsisting, and to a first lien in favor of the Insular Government to guarantee the payment of the special tax incurred pursuant to the provisions of Sec. 16 of Act 2259.

Control No. [illegible]

CERTIFICATION

I hereby certify that this is a true copy of OCT/TCT/CCT No. 316 Book No. [illegible] registered in the Registry of Deeds for the Province of [illegible] consisting of [illegible] pages.

Vayl [illegible]

ATTY. ANTONIETTA [illegible]
Registrar of Deeds

O.R. No. [illegible]
[illegible]

SEAL OF THE COURT
SELLO DEL JUZGADO

"Witness the Honorable Bartolome Sentillas, Judge of said Court, this 8th day of April, A. D. nineteen hundred and seventeen.

"Issued at Manila, P. I., this 10th day of October, A. D. [illegible] at 9:24 a. m.

ATTEST: ENRIQUE ALTAMIRA
Chief of the General Land Registration Office
Jefe de la Oficina General del Registro de Títulos

Received for transcription at the office of the Register of Deeds for the Province of Palawan this [illegible] day of [illegible], nineteen hundred and [illegible] at [illegible] M.

[illegible]
Registrar of Deeds
Registrador de Títulos

PLAN

OF

SUBDIVISION SURVEY MADE FOR

CLEMENTE SANDOVAL AND JOSEFA DACUNNON

OF LOT 68, Cad-33, CORON CADASTRE

DESCRIBED IN OCT No 318

ISSUED IN FAVOR OF

CLEMENTE SANDOVAL AND JOSEFA DACUNNON

SITUATED IN THE

BARANGAY CODE : 166393

BARANGAY/SITIO OF : POBLACION 2

MUN. / CITY OF : CORON

PROVINCE OF : PALAWAN

ISLAND OF : BUSUANGA

CONTAINING AN AREA OF 1,228 sq m

BEARINGS TRUE BRGS. 1° 16'E

SCALE 1 : 300

SURVEYED APRIL 5, 2018

GEODETIC ENGINEER

Plan Sub No. 1208 Date 08-23-67

PTS No. 11308613 Date 01-10-20

ORIGINAL SURVEY June 3 - June 28, 1918

Department of Justice

LAND REGISTRATION AUTHORITY

17 DEC 2019

0183625

PUBLIC TO VERIFY WITH LAND MANAGEMENT ENGINEERS

(LRA) Psd - E2019001889

CALLE SAN JOSE

CALLE BURGOS

LOT 68-A A = 176.50 M

LOT 68-O A = 132.50 M

LOT 68-B A = 109.50 M

LOT 68-P A = 144.50 M

LOT 68-C A = 84.50 M

LOT 68-N A = 50.50 M

LOT 68-D A = 68.50 M

LOT 68-M A = 50.50 M

LOT 68-E A = 49.50 M

LOT 68-L A = 50.50 M

LOT 68-F A = 33.50 M

LOT 68-K A = 33.50 M

LOT 68-G A = 33.50 M

LOT 68-J A = 33.50 M

LOT 68-H A = 33.50 M

LOT 68-I A = 83.50 M

LOT 68, Cad-33, CORON CADASTRE

LOT 68-A, Cad-33, CORON CADASTRE

LOT 68, Cad-33, CORON CADASTRE

LOT 68-A		
1-2	S 11° 22' E	3.91 M
2-3	S 79° 49' W	8.37 M
3-4	N 79° 26' W	3.61 M
4-1	N 79° 51' E	8.84 M

LOT 68-B		
1-2	S 11° 22' E	4.78 M
2-3	S 79° 51' W	8.41 M
3-4	N 79° 26' W	4.93 M
4-1	N 79° 50' E	11.13 M

LOT 68-C		
1-2	S 79° 50' W	11.13 M
2-3	N 11° 26' W	3.90 M
3-4	N 79° 47' E	8.01 M
4-5	N 11° 26' W	17.00 M
5-6	N 79° 47' E	8.18 M
6-1	S 11° 22' E	28.18 M

LOT 68-D		
1-2	N 79° 47' E	8.03 M
2-3	S 11° 26' E	17.00 M
3-4	S 79° 47' W	8.03 M
4-1	N 11° 26' W	17.00 M

LOT 68-P (ROAD)		
1-2	N 11° 22' W	3.91 M
2-3	N 11° 22' W	3.41 M
3-4	N 11° 22' W	4.78 M
4-5	N 11° 22' W	26.18 M
5-6	N 79° 47' E	3.01 M
6-7	S 11° 22' E	13.83 M
7-8	S 11° 22' E	7.60 M
8-9	S 11° 22' E	6.25 M
9-10	S 11° 22' E	6.25 M
10-11	S 11° 21' E	3.30 M
11-12	S 79° 48' W	9.26 M
12-13	S 10° 13' E	4.72 M
13-14	S 79° 47' W	8.44 M
14-15	S 10° 13' E	4.76 M
15-16	S 79° 08' W	1.13 M
16-1	N 11° 22' W	9.50 M

Tie line from BLLM # 1, Cad-33, CORON CADASTRE to Corner marked "1"

LOT NO.	BEARINGS	DISTANCES
CORN	N 00° 10' E	244.00 M.
68-A	N 48° 52' W	143.86 M.
68-B	N 48° 56' W	145.51 M.
68-C	N 81° 54' W	235.13 M.
68-D	N 81° 39' W	190.19 M.
68-E	N 81° 11' W	181.05 M.
68-F	N 81° 11' W	183.00 M.
68-G	N 66° 55' W	131.13 M.
68-H	N 81° 11' W	197.05 M.
68-I	N 66° 14' W	191.75 M.
68-J	N 39° 34' W	145.68 M.
68-K	N 09° 34' W	140.68 M.
68-L	N 81° 34' W	187.98 M.
68-M	N 86° 01' W	154.75 M.
68-N	N 86° 01' W	189.75 M.
68-O	N 81° 10' W	156.81 M.
68-P	N 87° 34' W	144.68 M.

This is to hereby certify that I, JULIANO B. TUGAS JR., Professional Land Surveyor, have prepared this plan (LRA) PSD-E2019001889 and found the same to be in order and that I, S. A. FLAUNO, Field Examiner, have reviewed this plan and found that the same is in accordance with CA 158.

JULIANO B. TUGAS JR.
Professional Land Surveyor

Date 12-17-20

ALEJANDRO FLAUNO
Field Examiner

Date 12-17-20

(LRA) PSD-E2019001889
VERIFICATION FEE
AMOUNT P 641.85
Official Receipt No. 8789833349
Date : 12-17-2019
Lic. Lots 81 Corners

COPY FOR THE ... This is to certify that this copy is a true and correct copy of the original plan on file in this Authority.

Coron City

N

S

DETAILED ESTIMATE

Project : Temporary Fence
Subject : Detailed Estimate
Area : 132.00 sq.m.

Quantity	Unit	PARTICULARS	Unit Cost	Labor Cost	AMOUNT
I. Earthworks					
a. Clearing and Grubbing					
1.00	ls	Clearing and Grubbing Works	10,000.00		10,000.00
		Subtotal a		*3,000.00*	*10,000.00*
b. Excavation					
1.00	ls	Excavation Works	10,000.00		10,000.00
		Subtotal b		*3,000.00*	*10,000.00*
SUMMARY OF COST					
		Material and Labor Cost	*26,000.00*		
		Indirect Cost			
		HANDLING COST	1,000.00		
		OCM	1,300.00		
		VAT	3,120.00		
		TOTAL PROJECT COST I	**31,420.00**		
II. Fencing					
a. Concrete Post					
5.00	cu.m	Gravel	1,500.00		7,500.00
2.50	cu.m	Sand	1,500.00		3,750.00
50.00	bags	cement	285.00		14,250.00
70.00	pcs	10mm RSB	180.00		12,600.00
8.00	pcs	G.I. Pipe 3" dia	3,100.00		24,800.00
22.00	pcs	G.I. Pipe 2" dia	2,800.00		61,600.00
3.00	rolls	Cyclone Wire 2"	2,500.00		7,500.00
5.00	kgs	Tie Wire #16	100.00		500.00
5.00	pcs	Ord.Marine Plywood	950.00		4,750.00
400.00	pcs	CHB #6	17.00		6,800.00
		Subtotal a		*43,215.00*	*144,050.00*
SUMMARY OF COST					
		Material and Labor Cost	*187,265.00*		
		Indirect Cost			
		HANDLING COST	7,202.50		
		OCM	9,363.25		
		VAT	22,471.80		
		TOTAL PROJECT COST II	**226,302.55**		
GRAND TOTAL PROJECT COST					
(I+II) in figures			**257,722.55**		
GRAND TOTAL PROJECT COST (I+II) in words			Two Hundred Fifty Seven Thousand Seven Hundred Twenty Two and 55/100.		

Prepared by:

Ram Cliffe U. Zamora
CIVIL ENGINEER

CamScanner

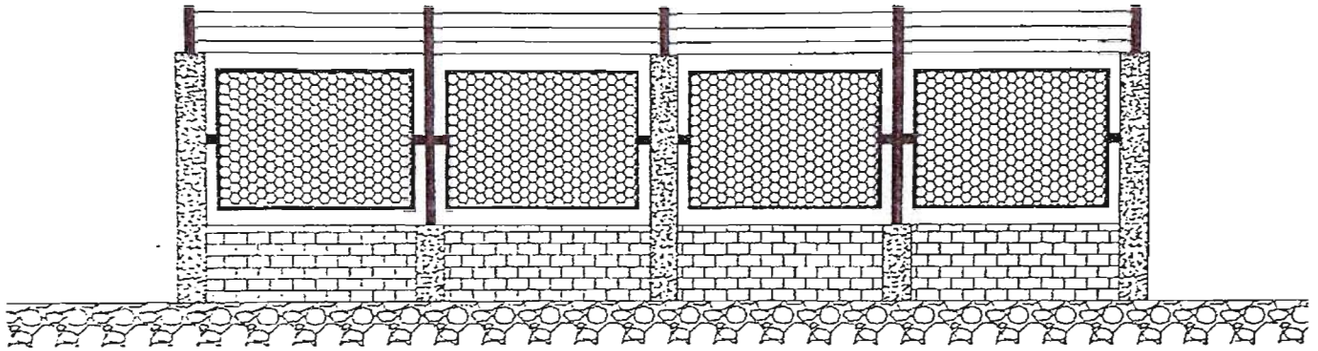

ELEVATION

SCALE: NTS

RAJA CLIFFE [illegible]	PROPOSED TEMPORARY FENCE	ERIC O. ECHAGUE	AS SHOWN	1
	LOCATION: BRGY. [illegible] 2 [illegible], PALAWAN	LOCATION: BRGY. [illegible], PALAWAN		

CamScanner

SUMMARY OF DETAILED ESTIMATE

'roject : Temporary Fence
ubject : Summary of Detailed Estimate
\rea : 132.00 sq.m.

TEM	SCOPE OF WORKS	DIRECT COST		INDIRECT COST	TOTAL
		Materials	Labor	(OCM,Handling Cost & VAT)	(Direct + Indirect Cost)
I	Earthworks	20,000.00	6,000.00	5,420.00	31,420.00
II	Fencing	144,050.00	43,215.00	39,037.55	226,302.55
				GRAND TOTAL:	257,722.55

Prepared by:

Ram Cliffe [illegible]
CIVIL ENGINEER

CamScanner

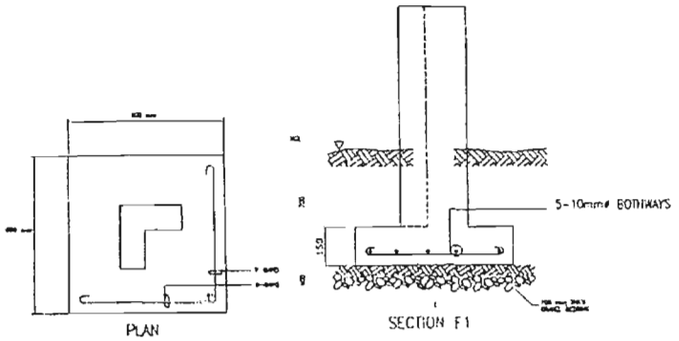

TYP. FOOTING DETAIL
SCALE : NTS

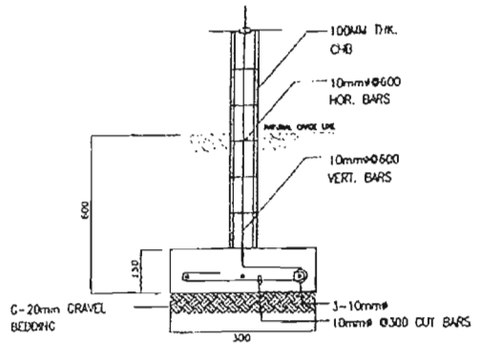

DETAIL OF WF
SCALE : NTS

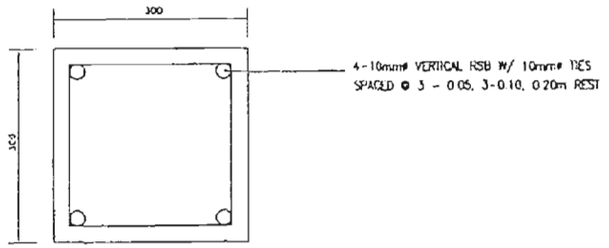

TYP. COLUMN DETAIL
SCALE : NTS

DESIGNED BY	PROJECT TITLE	PROJECT OWNER	SHEET CONTENT	SHEET No
RAM CLIFFE LEANDRO ROMANO CIVIL ENGINEER	PROPOSED TEMPORARY FENCE	ERIC O. ECHAGUE	AS SHOWN	2
	LOCATION: BGY. POB. 2, CORON, PALAWAN	LOCATION: BGY. BORAC, CORON, PALAWAN		

CamScanner

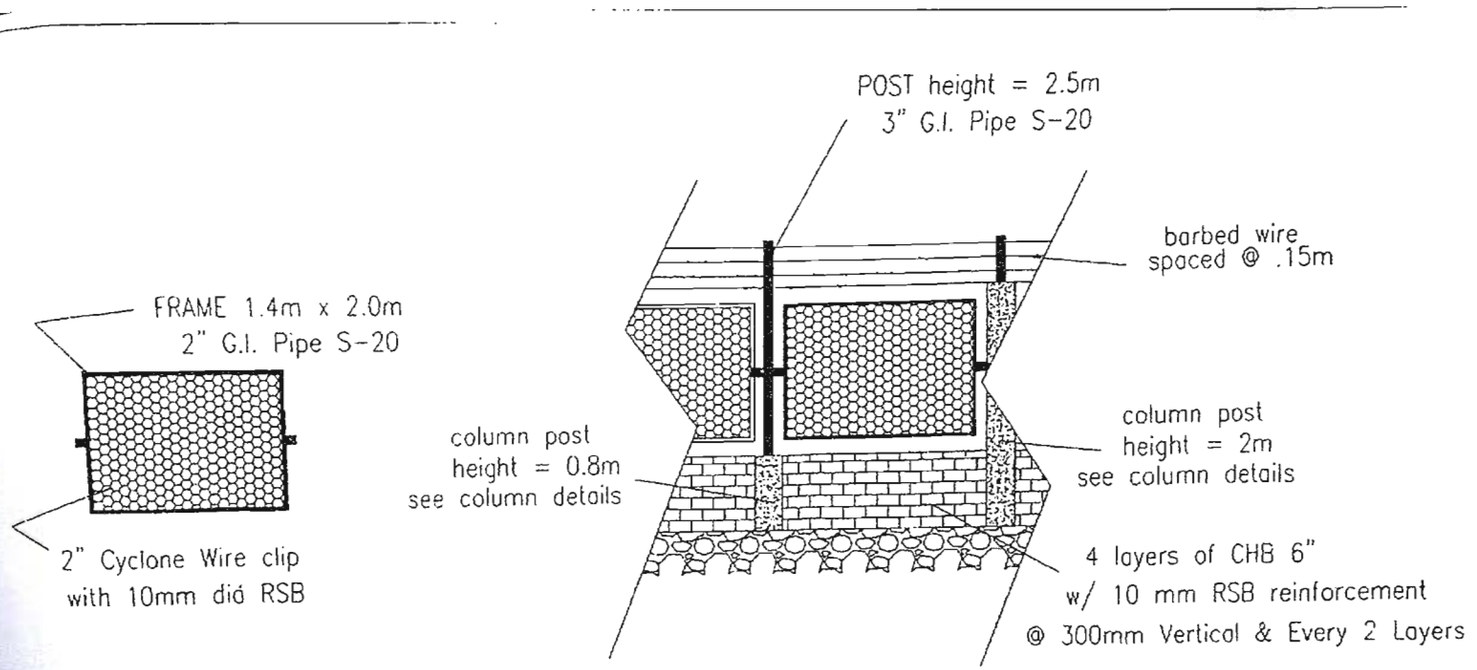

DETAILS OF FENCE

SCALE: NTS

(Note : All G.I. Pipe Connections are all in Full Weld)

RAM CLIFF L. ZAFRANOSY	PROJECT TITLE: PROPOSED TEMPORARY FENCE	PROJECT OWNER: ERIC O. ECHAGUE	SHEET CONTENT: AS SHOWN	SHEET No. 3
	DATE: DEC 1, 2014	LOCATION BGY. BORAC, COPON, PALAWAN		

CamScanner

TECHNICAL DESCRIPTION

LINES	BEARINGS	DISTANCES
68		
1-2	N 08° 27' W	14.77M.
2-3	N 25° 26' W	32.37M.
3-4	N 79° 47' E	31.92M.
4-5	S 11° 22' E	45.50M.
5-1	S 78° 09' W	24.80M.
LOT 68-A		
1-2	S 79° 47' W	13.70M.
2-3	N 11° 22' W	12.85M.
3-4	N 79° 47' E	13.70M.
4-1	S 11° 22' E	12.85M.
LOT 68-B		
1-2	S 11° 22' E	7.60M.
2-3	S 79° 47' W	13.70M.
3-4	N 11° 22' W	7.60M.
4-1	N 79° 47' E	13.70M.
LOT 68-C		
1-2	S 79° 47' W	13.70M.
2-3	N 11° 22' W	6.25M.
3-4	N 79° 47' E	13.70M.
4-1	S 11° 22' E	6.25M.
LOT 68-D		
1-2	S 11° 22' E	6.25M.
2-3	S 79° 47' W	13.70M.
3-4	N 11° 22' W	6.25M.
4-1	N 79° 47' E	13.70M.
LOT 68-E		
1-2	S 79° 47' W	6.73M.
2-3	N 11° 22' W	3.30M.
3-4	N 79° 47' E	13.70M.
4-5	S 10° 13' E	6.30M.
5-1	S 79° 47' W	6.91M.
LOT 68-F		
1-2	N 79° 47' E	6.91M.
2-3	S 12° 10' E	4.72M.
3-4	S 79° 47' W	7.07M.
4-1	N 10° 13' W	4.72M.
LOT 68-G		
1-2	N 10° 13' W	4.54M.
2-3	N 79° 47' E	0.32M.
3-4	N 79° 47' E	7.07M.
4-5	S 11° 22' E	4.33M.
5-1	S 78° 09' W	7.49M.
LOT 68-H		
1-2	S 10° 13' E	4.72M.
2-3	S 79° 47' W	0.32M.
3-4	S 79° 47' W	6.67M.
4-5	N 10° 13' W	4.72M.
5-6	N 79° 47' E	0.26M.
6-1	N 79° 47' E	6.73M.
LOT 68-I		
1-2	S 78° 09' W	7.11M.
2-3	N 10° 13' W	4.75M.
3-4	N 79° 47' E	0.44M.
4-5	N 79° 47' E	6.67M.
5-1	S 10° 13' E	4.54M.
LOT 68-J		
1-2	N 79° 47' E	1.75M.
2-3	S 10° 13' E	4.72M.
3-4	S 79° 47' W	0.44M.
4-5	S 10° 13' E	4.75M.
5-6	S 78° 09' W	10.21M.
6-7	N 08° 27' W	9.76M.
7-1	N 79° 47' E	8.59M.
Lot 68-K		
1-2	S 79° 47' W	8.59M.
2-3	N 08° 27' W	5.01M.
3-4	N 25° 26' W	0.94M.
4-5	N 79° 47' E	8.56M.
5-1	S 11° 22' E	5.91M.
Lot 68-L		
1-2	S 11° 22' E	5.41M.
2-3	S 79° 47' W	8.56M.
3-4	N 25° 26' W	5.61M.
4-1	N 79° 47' E	9.93M.
Lot 68-M		
1-2	S 11° 22' E	4.75M.
2-3	S 79° 47' W	9.93M.
3-4	N 25° 26' W	4.92M.
4-1	N 79° 47' E	11.12M.
Lot 68-N		
1-2	S 79° 47' W	11.12M.
2-3	N 25° 26' W	3.90M.
3-4	N 79° 47' E	8.03M.
4-5	N 25° 26' W	17.00M.
5-6	N 79° 47' E	8.18M.
6-1	S 11° 22' E	20.18M.
Lot 68-O		
1-2	N 79° 47' E	8.03M.
2-3	S 25° 26' E	17.00M.
3-4	S 79° 47' W	8.03M.
4-1	N 25° 26' W	17.00M.
Lot 68-P		
1-2	N 11° 22' W	5.91M.
2-3	N 11° 22' W	5.41M.
3-4	N 11° 22' W	4.75M.
4-5	N 11° 22' W	20.18M.
5-6	N 79° 47' E	2.01M.
6-7	S 11° 22' E	12.85M.
7-8	S 11° 22' E	7.60M.
8-9	S 11° 22' E	6.25M.
9-10	S 11° 22' E	6.25M.
10-11	S 11° 22' E	3.30M.
11-12	S 79° 47' W	0.26M.
12-1	S 79° 47' W	1.75M.

Tie lines from BLLM #1, CAD 33, CORON CADASTRE, CORON, PALAWAN to Corner Marked "1":

LOT NO.	BEARINGS	DISTANCES
BDRY	N 64° 48' W	144.60M.
68-A	N 48° 55' W	149.86M.
68-B	N 48° 55' W	149.86M.
68-C	N 52° 24' W	139.14M.
68-D	N 52° 24' W	139.14M.
68-E	N 57° 11' W	137.09M.
68-F	N 57° 11' W	137.09M.
68-G	N 60° 14' W	131.20M.
68-H	N 57° 11' W	137.09M.
68-I	N 60° 14' W	131.20M.
68-J	N 59° 34' W	143.61M.
68-K	N 59° 34' W	143.61M.
68-L	N 56° 22' W	151.39M.
68-M	N 55° 08' W	154.79M.
68-N	N 55° 08' W	154.79M.
68-O	N 54° 20' W	160.91M.
68-P	N 59° 34' W	143.61M.

CamScanner

Accountable Form No. 51-C
Revised January, 1992

(ORIGINAL)

Official Receipt of the Republic of the Philippines

MTO-CORON

ERIC C. ECHAGUE

Nº 2551912 L

October 20, 2022

301

Date

Agency

Fund

Payor

Nature of Collection | Account Code | Amount

P

Remarks:

Three Hundred Eighteen Pesos & Forty Eight Centavos Only

TOTAL P

Amount in Words

Cash | Drawee Bank | Number | Date

Check

Money Order

Received the amount stated above.

Collecting Officer

NOTE: Write the number and date of this receipt on the back of check or money order received.

Accountable Form No. 51-C
Revised January, 1992

(ORIGINAL)

Official Receipt of the Republic of the Philippines

Nº 2551899 L

Date October 20, 2022

MTO-CORON

Agency

Fund

Payor ERIC O. ECHAGUE

Nature of Collection | Account Code | Amount

P

Remarks

TOTAL

Amount in Words

Cash | Drawee Bank | Number | Date

Check

Money Order

Received the amount stated above.

Collecting Officer

NOTE: Write the number and date of this receipt on the back of check or money order received.

CamScanner

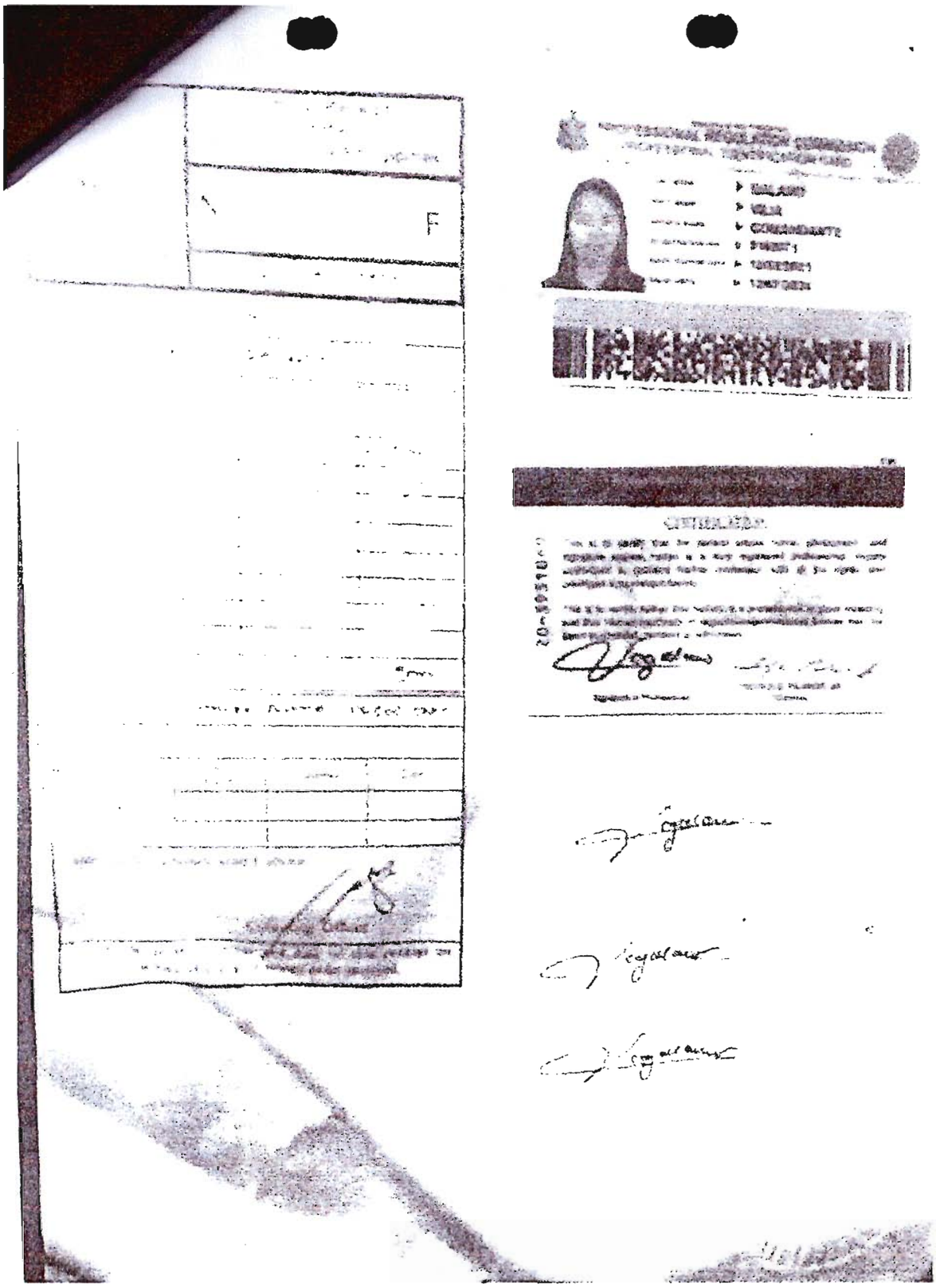

CamScanner

Republic of the Philippines
Province of Palawan
Municipality of Coron
Barangay Poblacion 2

OFFICE OF THE PUNONG BARANGAY

CERTIFICATION

TO WHOM IT MAY CONCERN:

THIS IS TO CERTIFY that **RAFAELA TAN ECHAGUE** (deceased) ,represented by her heir ,**ERIC O. ECHAGUE**, of legal age, married , one of the heirs of SPOUSES LAMENTE SANDOVAL (deceased) and JOSEFA DACUNNON (deceased) , known to be the absolute owner of a certain area with Original Certificate of Title No. 316 and land area of one thousand two hundred twenty six (1,226 sq.mtrs.) square meters located at Barangay Poblacion 2, in this barangay.

CERTIFIES FURTHER , that **RAFAELA TAN ECHAGUE** owned and assigned to her a portion of lot from a parcel of land mentioned above with **lot no, 68-O** measuring an area of **132 square meters** , based on a duly notarized Extra Judicial Settlement of the State of the late Spouses Lamente Sandoval and Josefa Dacunnon by the Heirs , and the Subdivision Plan of Land is hereto attached..

This CERTIFICATION is being issued upon request of Mr. Eric O. Echague for his application for fencing permit and whatever entered legal purpose/s it may serve him best.

Given This 20th day of June 2019 at Bgy. Poblacion 2. Coron,Palawan.

OSCAR A. AMIT JR.
Punong Barangay

CamScanner

CERTIFIED TRUE COPY
OFFICE OF THE MUNICIPAL ENGINEER

EXTRAJUDICIAL SETTLEMENT OF
ESTATE OF THE LATE SPOUSES LAMENTE SANDOVAL
AND JOSEFA DACUNNON BY THE HEIRS

KNOW ALL MEN BY THESE PRESENTS:

This **Extra-judicial Settlement of Estate** made and executed by and among the only surviving heirs of the late spouses **LAMENTE SANDOVAL** and **JOSEFA DACUNNON** , namely: **MANUEL TAN, JOSE TAN, SIMPLICIO TAN SR., SOLEDAD TAN, NICOLASA TAN.**

1. **MANUEL TAN** married to **TRINIDAD SANDOVAL** – survived by their heirs namely:

    1. Concepcion Tan Ortega – deceased, resident of Coron, Palawan, Compulsory Heir – Ramon Ortega (grandson) of legal age ,married herein represented by Gustavo T. Torres by virtue of Special Power of attorney photocopy herein attached and form an integral part hereof

    2. Ines Tan Dormile – survived by her heir Erlinda Dormile herein represented by Gustavo Torres by virtue of Special Power of Attorney photocopy herein attached and form an integral part hereof.

    3. Pilar Tan Echague- survived by her four children namely:

        1. Mario T. Echague – of legal age ,widow ,residing in Coron, Palawan
        2. Trinidad E. Rafols – of legal age,widow, residing in Coron, Palawan
        3. Prescilla E. Concepcion-of legal age,widow, residing in Coron, Palawan
        4. Redempto T. Echague – of legal age, married, residing in Coron, Palawan
        5. Cleofe T. Echague- deceased, survived by wife and children namely: Angelica R. echague, Ma. Cleofe E. Nallas , Shahani E. Abis, Wyndle R. Echague, Mark R. Echague, Maria Paz E. Velasquez, hereto duly represented by their mother Angelina R. Echague by virtue of Special Power of Attorney, photocopy hereto attached and form an integral part hereof.

    4. Maria Tan Torres –deceased survived by children namely:
        1. Gustavo T. Torres - of legal age, married, resident of Coron, Palawan.
        2. Eleanor T. Reunir - of legal age, widow, resident of Coron, Palawan.
        3. Rowena T. Balon –of legal, age, married, resident of Coron, Palawan all are herein represented by their sibling Gustavo T. Torres by virtue of Special Power of Attorney , photocopy hereto attached and form an integral part hereof.

    5 Nemesina Tan Garraez- Deceased, survived by children Namely and duly represented by their sibling Antonio Garraez by virtue of Special Power of Attorney hereto attached and form an integral part hereof.

Republic of the Philippines
Province of Palawan
Municipality of Coron
BARANGAY POBLACION 2

OFFICE OF THE PUNONG BARANGAY

CERTIFICATION

THIS IS TO CERTIFY that **MRS. ELLEN CUSTODIO PAULO** legal age, is a bonafide member and resident of Barangay Poblacion 2,Coron, Palawan

FURTHER CERTIFIED that the said person is Actual Occupant of Barangay Poblacion 2, Coron, Palawan for 35 years.

THIS CERTIFICATION is issued upon request OF MRS. ELLEN C. PAULO for whatever purposed it may serve her best.

Given this 26th day of July 2019, at Barangay Poblacion2,Coron,Palawan,Philipines.

OSCAR A. AMIT JR.
Punong Barangay

Republic of the Philippines
OFFICE OF THE OMBUDSMAN
Office of the Deputy Ombudsman for Luzon
Agham Road, Diliman, Quezon City 1604

26 September 2019

MR ARNOLDO A. BLAZA, JR.
OIC- Community Environment and Natural Resources Officer
Community Environment and Natural Resources Office
Coron
5316 Palawan

RE: OFA-L-19-1484-M and
OFA-L-19-1485-M

Dear Community Environment and Natural Resources Officer Blaza:

This pertains to the letters both dated 31 August 2019 from Ms. Ellen Sandoval Custodio Paulo, Attorney-in-Fact of Mr. Renato Custodio, each of which is copy furnished us, following-up their request on 30 July 2019 before your office for the issuance of a Certification of Land Classification covering the area of Burgos Street, Barangay Poblacion 2, Coron, Palawan. Requester claims delay in acting on her request.

In this connection, we refer this matter to you for whatever action you may deem appropriate, the matter falling under your jurisdiction.

Thank you.

Very truly yours,

By authority of the Ombudsman

for: 27 Sept. 2019
RAQUEL ROSARIO M. CUNANAN- MARAYAG
Director
Public Assistance and Corruption Prevention Bureau-Luzon

JCR

Copy furnished:

Mr. Renato Custodio, Sr.
Ms. Ellen Sandoval Custodio Paulo
Barangay Poblacion 2, Coron
5316 Palawan

Departm[redacted] of Environment and Natural Resource[redacted]
MIMARC[redacted] A Region
COMMUNITY ENVIRONMENT AND NATURAL RESOURCES OFFICE
Coron, Province of Palawan
cenro_coron@yahoo.com

CERTIFICATION

(Land Classification)

TO WHOM IT MAY CONCERN:

THIS IS TO CERTIFY that based from the records of this Office **Lot No. 66, Cad. 33 Coron Cadastre** with an area of **950 square meters** located at **Barangay Poblacion 2, Coron, Palawan** is listed to **ANGEL CALINGAO**. However, portion of the said lot with an area of **290 square meters** is covered by Tax Declaration No. 002-0010-C issued to **RENATO CUSTODIO.** The lot was verified to be within the Agricultural Area **(Alienable and Disposable Zone)** per L.C. Map No. 127, Project No. 2 certified on November 23, 1933.

This corresponding Certification Fee is paid in the amount of Php.50.00 with O.R. No. 9864613 dated Nov 18, 2018.

Issued upon request of **RENATO CUSTODIO** for **personal use only**, this 14TH day of August, 2019 at CENRO Coron, Palawan.

VERIFIED CORRECT:

ARNEL D. CABANILLAS
LMO II

MARINA A. ABE
Administrative Officer I

ATTESTED BY:

JUDITH P. QUIRIT
LMO III
In-Charge, Regulation & Permitting Section

EDWIN I. CAC
SEMS
In-Charge, Monitoring & Enforcement Section

FERDINAND D. GATCHALIAN
Forester III
In-Charge Conservation & Development Section

SUBSCRIBED AND SWORN TO before me this _____ day of August, 2019 at CENRO, Coron, Palawan.

CENRO
108
RECEIVED
DATE: 11-18-19

ARNOLDO A. BLAZA, JR.
OIC CENRO

/jpq*

Not valid without the CENRO Official seal

a. Adverse claim nina **GNG. MARIETA SANDOVAL FERRERA at GNG. FLORINA SANDOVAL FERRERA**.
b. Death Certificate ni **G. JOSE DADAYA** na pumirma sa extrajudicial may labinlimang taon (15 years) ng patay at pinatunayan ito ng kanyang kapatid na si **EDGARDO DADAYA.**

4. Wala pa silang approved plan at ang kanilang isinumete ay isang survey plan pa lamang.

Kalakip din po sa sulat na ito ang electronic file ng **Original Certificate of Title** 316 na kinuha nitong April 2019 na malinis at wala pang annotation ng Extrajudicial at paghahati (subdivision) sa lupa, samakatuwid nasa may-ari pa ang lahat ng karapatan.

Kalakip din po rito ang photocopy ng **COURT ORDER AT DECISION NG KORTE** tungkol sa re-issuance of title ni **G. ALFONSO PAMADO** na maaaring makatulong sa inyong pagdedesisyon.

Kalakip din po rito ang **TAX DECLARATION** ni **G. LAMENTE SANDOVAL.**

Kalakip din ang **CERTIFICATION** mula sa MPDC na wala silang Clearance na ibinibigay para kay G. Eric Echague.

Sa isinumete kong mga documento at paglalahad ko ng aking personal na dahilan, na sa aking palagay ay aking karapatan, nais kong malaman ang iyong kasagutan kung sapat na ba ito upang ipahinto at huwag ituloy ang pagbabakod; at kung hindi pa ito sapat ano ang dahilan o basehan upang maipagpatuloy ang pagbabakod.

Hihintayin ko ang iyong kasagutan bago ang pagbabakod na kanilang gagawin ngayong August 5, 2019 araw ng Lunes.

GNG. ELLEN CUSTODIO PAULO
SINGLE PARENT/ACTUAL OCCUPANT

cc:

OFFICE OF THE MAYOR
CORON, PALAWAN

OFFICE OF THE COMMISSION ON HUMAN RIGHTS
UNIT 7, CNMS BUILDING,
TINIGUIBAN, PUERTO PRINCESA CITY

OFFICE OF THE OMBUDSMAN
AGHAM ROAD DILIMAN QUEZON CITY

Engineering Office
7/29/2019

Republic of the Philippines
Department of Justice
PUBLIC ATTORNEY'S OFFICE
Coron, Palawan District Office
2/F National Agencies Bldg., Burgos cor. Real Sts.
Poblacion 2, Coron, Palawan 5316

8/16/19

16 August 2019

Engr. IKE PARANGUE
Municipal Engineer
Office of the Municipal Engineer
Coron, Palawan

RECEIVED
approved
28 JUL 2019

Re: (1) Fencing Permit issued to Mr. Gustavo Torres, and
(2) Fencing Permit issued to Mr. Eric Echague

Dear Sir,

Respectfully referring to you the matter brought to our Office by Mr. Jeffrey Echague, Ms. Cristina B. Sianson, Ms. Elaine Custodio, and Ms. Marjorie Dadaya, all residents of Brgy. Poblacion 2, Coron, Palawan. Mr. Echague, and Ms. Sianson are concerned with Fencing Permit issued by Your Office to Mr. Gustavo T. Torres, copy hereto attached as **Annex "A"**. On the other hand, Ms. Custodio, and Ms. Dadaya, are concerned with Fencing Permit issued by Your Office to Mr. Eric Echague, copy herein attached as **Annex "B"**. Clients claim that per inquiry from Your Office, a (1) *Barangay Clearance*, and an (2) *Approved Title, with Lot Description*, among others, are required for the issuance of a Fencing Permit. And in compliance with the same Mr. Torres, and Mr. Echague allegedly submitted herein documents attached as **Annex "C"** for Barangay Clearance of Mr. Gustavo, **Annex "D"** for Barangay Clearance of Mr. Echague, and **Annex "E"**, for Approved Title, with Lot Description.

As clients asked undersigned to check the documents, perusal of the same reveals that the documents marked as **Annexes "C"** and **"D"**, do not contain any statement that the parcel of land subject of the Application is free, or at least cleared, from any complaint, dispute, or controversy. Also, the document marked as **Annex "E"** does not contain the name of the applicants. Moreover, while the Title is supported by an Extrajudicial Settlement of Estate of the registered owners, Lamente Sandoval and Josefa Dacunon, copy herein attached as **Annex "F"**, the same however, is not duly annotated in the Title, thus negating any valid claim of transfer of ownership, partition, or any transaction involving the land, in favor of any person. As can be gleaned from the title, the land covered by the same is co-owned in equal shares by all the Heirs of Spouses Lamente Sandoval and Josefa Dacunon.

Most respectfully, undersigned deems that the matter falls under the jurisdiction of Your Office. Hence, This Referral.

Our clients would like to seek clarification on the compliance of the documentary requirements for the Application of Fencing Permit of Mr. Torres and Mr. Echague. They claim to be the actual occupants of the land, hence, aggrieved by the issuance of the said permits.

Undersigned hopes that this matter will be settled amicably to prevent further recourse to other forum.

Thank you.

Respectfully yours,

Atty. Jocelyn G. Fumera
Officer-In-Charge
PAO-Coron, Palawan District Office

NB: Herein furnished is the Honorable Mayor as a matter of courtesy, and the Regional Public Attorney, for better monitoring of the services rendered by the District Office. Advice on the action taken will be highly appreciated. Thank you.

cc:

Hon. MARJO T. REYES
Municipal Mayor
Coron, Palawan

Dir. REVELYN V. RAMOS-DACPANO
Regional Public Attorney
PAO – MIMAROPA
4/F DOJ Agencies Bldg., LRA Cmpd.
NIA Rd. cor. East Ave., Diliman, Quezon City

LBC 1496-0702-0168
8-16-19

OCTOBER 5, 2020

RAQUEL ROSARIO M. CUNANAN-MARAYAG
Director, PACB-Luzon
Office of the Deputy Ombudsman for Luzon
Agham Road, Diliman, Quezon City 1104

RE: COMPLIANCE-RAS(IS)-L-20-0072-M

Dear Madam:

This complies the directives of the Office of the Ombudsman regarding the complaint filed by certain Ellene Custodio and Marjorie Dadaya in your office.

I am thankful for the opportunity given to comment on the complaint filed against me to shed light on the matters raised by the complainants on the issues contained in the complaint. The undersigned wants to help the organization to arrive at a reasonable and judicious conclusion based on the facts and surrounding circumstances relevant to the issues and therefore file this Comment, in compliance with the directive of the office, and to answer those charges.

It is true that the Fencing Permit was approved by the undersigned as the applicant Gustavo Torres submitted all the necessary requirements needed by the Engineering Office in processing such permit.

For the information of your office as well as the public, the Engineering Office set parameters for the issuance of the Fencing Permit to any application in accordance with the National Building Code and Regulation to, wit:

1. Barangay Clearance
2. Cedula
3. Approved Titled of Land with Technical Description
4. Bill of Materials
5. Complete Plan of Fence with signed and sealed of Civil Engineer

The applicant Mr. Gustavo Torres submitted to the office the necessary requirements in support of his application for fencing permit, to wit:

1. Barangay Certification dated June 20, 2019
2. Cedula of Gustavo Torres with #31243398
3. Extra Judicial Settlement of Estate of late spouses Lamente Sandoval and Josefa Dacunon dated November 6, 2018
4. Tax Decalaration No. 002-0011 in the name of Alfonso Pamado
5. Subdivision Plan of Lot 68 (but not approved)
6. Copy of the Original Certificate of Title No. 316

8. Detailed Estimate
9. Details of Concrete Post
10. Official Receipts #1199499 and 1201117

Considering that the applicant has complied with the requirements by the Office, it is but proper and appropriate, in accordance with the existing Laws and Regulation that our office must issue fencing permit to the applicant.

It is not our mandate to evaluate whether or not the documents submitted are tainted with irregularities. It is beyond my call being the Municipal Engineer to ascertain the veracity of the documents submitted considering that they are Public documents, as the said documents were either issued by other offices of the Government or notarized by a Notary Public.

The grounds for revocation/suspension and non-issuance of Building Permits including Fencing Permits are expressly provided under Sec. 306 of P. D. 1096 otherwise known as the National Building Code. For clarity Sec. 306 of P. D. 1096 is hereby quoted:

> "The Building Officials may order or cause the non-issuance, suspension or revocation of building permit on any or all of the following reasons or ground:
>
> a) Errors found in the plans and specification;
> b) In correct or inaccurate data or information supplied;
> c) Non-compliance with the provision of this Code or any rule or regulation
> xxx xxx xxx"

The undersigned believes that there were no such grounds for the revocation of Fencing Permit issued to Mr. Gustavo Torres, although this office also found out that the Subdivision Plan is not an approved plan, but nonetheless it is not a ground for revocation of the permit.

A perusal of the Fencing Permit issued to the Mr. Gustavo Torres, would show that the entries therein, by simple expediency of looking as there are in other ways to look at it, do not suffer any irregularities, or do not appear to contain any apparent defects on it. Hence it is just and proper for the Engineering Office to issued permit to the applicant.

The allegation in the complaint that there is an irregularity in the Extra Judicial Settlement is beyond my power to determine, as the said document was notarized by a notary public and considered as Public Document. Assuming that there is an irregularity in the Extra Judicial Settlement, what the complainant

must do is to file an annulment of that document in the proper court but not in my office.

The same with the issue of right to access or right of way going and out of the residence of the complainants, to the detriments of several persons using such access/passage. Those are issues that cannot be entertained by the Engineering Office as these issues can only decided by the court of competent jurisdiction after case/s have been filed.

Thank you very much.

Respectfully yours,

IKE D. PARANGUE
Municipal Engineer
Coron, Palawan

Copy Furnished:

ELLENE CUSTODIO
MARJORIE DADAYA

JULY 25, 2019

ENP/ENGR. MICHAEL ADRIAN F. FABABEIR, MPA, MURP
OFFICE OF THE MUNICIPAL PLANNING & DEV'T COORDINATOR
MUNICIPALITY OF CORON
CORON, PALAWAN

Sir,

Magandang araw!

Ako po si **ELLEN CUSTODIO PAULO**, nasa hustong edad, ***isang single parent*** at inaasahan ng apat na anak, may tatlumpu't limang taon (35 years) ng residente at naninirahan sa isa sa loteng makikita sa Barangay 2, Coron, Palawan, ay nais humingi ng **malinaw na kopya (CLEAR COPY)** ng mga documentong isinumete upang maisyuhan ng inyong tanggapan ng **FENCING PERMIT** na may numerong **020190000 na si G. ERIC ECHAGUE**, na magbabakod sa **AUGUST 5, 2019**, araw ng lunes, sa harap ng aming tahanan at tindahan,, nasa aking pagkakaalam ay tatamaan din ang bahagi ng sidewalk, na kung sakaling mabakuran ang bahaging harapan ay malaking perwisyo sa akin sapagkat duon nanggagaling ang ikinabubuhay ng aking apat na anak bilang isang single parent.

Inaasahan ko ang inyong dagliang pagtugon. Maraming salamat.

GNG. ELLEN CUSTODIO PAULO
SINGLE PARENT/ACTUAL OCCUPANT

RECEIVED
MUNICIPAL PLANNING AND DEVELOPMENT OFFICE
DATE: July 25, 2019

Republic of the Philippines
Province of Palawan
MUNICIPALITY OF CORON
MUNICIPAL PLANNING AND DEVELOPMENT OFFICE

CERTIFICATION

This is to certify that as per record of the Municipal Planning and Development Office have not issued any **Locational Clearance** to **Mr. Eric Echague** regarding the fencing of his lot in Bgy. Poblacion 2, Coron, Palawan

Issued this 26th day of July 2019 upon request of **Ms. Ellen Custodio Paulo** for whatever legal purpose it may serve.

ENP/ENGR. MICHAEL ADRIAN FABABEIR, *MPA, MAURP*
MPDC

HON. OSCAR AMIT
BGY. CAPTAIN
BGY. POB. 2, CORON, PALAWAN

RECEIVED
SIGNATURE:
DATE: 7/30/19
TIME: 11:14 AM
DILG-CORON, PALAWAN RECORDS UNIT

7/30/19

Sir,

Ako po si **ELLEN CUSTODIO PAULO**, nasa hustong edad, isang single parent at inaasahan ng apat na anak, may tatlumpu't limang taon (35 years) ng residente at naninirahan sa isa sa bahaging lote ng Barangay 2, Coron, Palawan ay tumututol at humahadlang sa pagbabakod na gagawin ni **G. ERIC ECHAGUE** na may **FENCING PERMIT** na **020190000** na gagawin sa **August 5, 2019** araw ng Lunes dahil ang kanilang **EXTRAJUDICIAL** ay may mga hadlang tulad ng sumusunod na documento na nakalakip sa sulat na ito:

1. Adverse claim na sina **GNG. MARIETA SANDOVAL FERRERA at GNG. FLORINA SANDOVAL FERRERA**.
2. Certificate of Death ni **G. JOSE DADAYA:** Pinatunayan ito ng kanyang kapatid na si **EDGARDO DADAYA** na may 15 years ng patay ang kanyang kapatid na si **G. JOSE DADAYA** ngunit nagkaroon pa ng transaksyon tulad ng pagpirma sa **EXTRAJUDICIAL** noong 2018.
3. Electronic File ng **OCT 316** na wala pang annotation ng extrajudicial at paghahati sa lupa.
4. **COURT ORDER AT DECISION** sa re-issuance of title ni **ALFONSO PAMADO**.
5. **CERTIFICATION** mula sa OFFICE OF THE MUNICIPAL PLANNING & DEV'T COORDINATOR (MPDC) na wala silang iniisyung CLEARANCE para sa FENCING PERMIT ni G. ERIC ECHAGUE.

Ako bilang isang ina at siyang actual occupant ay pinaglalaban ang aming karapatang mabuhay ay tumututol at humahadlang sa pagbabakod dahil sa mga sumusunod:

1. Hindi isang bakante/abandonadong lote ang nais nilang bakurin. Ako kasama ng apat kong anak ang siyang matagal ng naninirahan sa loteng nais nilang bakurin.
2. Wala silang muhon at nasa sidewalk na ang kanilang pagbabakuran.
3. Wala siyang **Court Order** na nagpapatunay na sila na ang nagmamay-ari ng lupa at puwede na nilang harangan/bakuran ang aking hanapbuhay na siyang pinagkukunan at binubuhay ko sa aking mga anak.

Sa mga isinumete kong documento at paglalahad ng aking saloobing at karapatan bilang isang ina at actual occupant ay maging daan upang makatulong na mapag-aralan at mapagnilayan niyo na mabigyan ng inyong tanggapan ng tamang aksyon bago ang pagbabakod na mangyayari ngayong **August 5, 2019**.

Nais kong malaman ang inyong kasagutan bago ang gagawing pagbabakod.

ELLEN CUSTODIO PAULO
SINGLE PARENT/ACTUAL OCCUPANT

cc:

OFFICE OF THE MAYOR
CORON, PALAWAN

OFFICE OF THE DILG (DEPARTMENT OF INTERIOR AND LOCAL GOVERNMENT)
CORON, PALAWAN

OFFICE OF THE COMMISSION ON HUMAN RIGHTS
UNIT 7, CNMS BUILDING,
TINIGUIBAN, PUERTO PRINCESA CITY

July 30, 2019

HON. OSCAR AMIT
BGY. CAPTAIN
BGY. POB. 2, CORON, PALAWAN

DILG - CORON, PALAWAN
RECEIVED
SIGNATURE:
DATE: 7/30/19
TIME:
RECORDS UNIT

Sir,

Ako po si **ELLEN CUSTODIO PAULO**, nasa hustong edad, isang single parent at inaasahan ng apat na anak, may tatlumpu't limang taon (35 years) ng residente at naninirahan sa isa sa bahaging lote ng Barangay 2, Coron, Palawan ay tumututol at humahadlang sa pagbabakod na gagawin ni **G. ERIC ECHAGUE** na may **FENCING PERMIT** na **020190000** na gagawin sa **August 5, 2019** araw ng Lunes dahil ang kanilang **EXTRAJUDICIAL** ay may mga hadlang tulad ng sumusunod na documento na nakalakip sa sulat na ito:

1. Adverse claim na sina **GNG. MARIETA SANDOVAL FERRERA at GNG. FLORINA SANDOVAL FERRERA**.
2. Certificate of Death ni **G. JOSE DADAYA:** Pinatunayan ito ng kanyang kapatid na si **EDGARDO DADAYA** na may 15 years ng patay ang kanyang kapatid na si **G. JOSE DADAYA** ngunit nagkaroon pa ng transaksyon tulad ng pagpirma sa **EXTRAJUDICIAL** noong 2018.
3. Electronic File ng **OCT 316** na wala pang annotation ng extrajudicial at paghahati sa lupa.
4. **COURT ORDER AT DECISION** sa re-issuance of title ni **ALFONSO PAMADO**.
5. **CERTIFICATION** mula sa OFFICE OF THE MUNICIPAL PLANNING & DEV'T COORDINATOR (MPDC) na wala silang iniisyung CLEARANCE para sa FENCING PERMIT ni G. ERIC ECHAGUE.

Ako bilang isang ina at siyang actual occupant ay pinaglalaban ang aming karapatang mabuhay ay tumututol at humahadlang sa pagbabakod dahil sa mga sumusunod:

1. Hindi isang bakante/abandonadong lote ang nais nilang bakurin. Ako kasama ng apat kong anak ang siyang matagal ng naninirahan sa loteng nais nilang bakurin.
2. Wala silang muhon at nasa sidewalk na ang kanilang pagbabakuran.
3. Wala siyang **Court Order** na nagpapatunay na sila na ang nagmamay-ari ng lupa at puwede na nilang harangan/bakuran ang aking hanapbuhay na siyang pinagkukunan at binubuhay ko sa aking mga anak.

Sa mga isinumete kong documento at paglalahad ng aking saloobing at karapatan bilang isang ina at actual occupant ay maging daan upang makatulong na mapag-aralan at mapagnilayan niyo na mabigyan ng inyong tanggapan ng tamang aksyon bago ang pagbabakod na mangyayari ngayong **August 5, 2019**.

Nais kong malaman ang inyong kasagutan bago ang gagawing pagbabakod.

ELLEN CUSTODIO PAULO
SINGLE PARENT/ACTUAL OCCUPANT

cc

OFFICE OF THE MAYOR
CORON, PALAWAN

OFFICE OF THE DILG (DEPARTMENT OF INTERIOR AND LOCAL GOVERNMENT)
CORON, PALAWAN

OFFICE OF THE COMMISSION ON HUMAN RIGHTS
UNIT 7, CNMS BUILDING
TINIGUIBAN, PUERTO PRINCESA CITY

OFFICE OF THE OMBUDSMAN
AGHAM ROAD, DIWAN, QUEZON CITY

OSCAR A. AMIT JR
DIR 9 7/30/19

Republic of the Philippines
Province of Palawan
Municipality of Coron
Municipal Social Welfare and Development Office

SOLO PARENT ID

SP19-0573 ( )
ID No.

ELLEN C. PABLO
NAME

FLORA L. NAGAMOS, RSW
MSWDO

MARIO T. [illegible], JR.
Municipal Mayor

Address: Bgy. Poblacion 2, Coron, Palawan
Date of Birth: November 22, 1977 Sex: F

Name	Date of Birth	Relationship
Khristine Mae Paulo	09-26-01	Daughter
Marielle Ann Paulo	05-29-07	Daughter
Dailan Jezh Paulo	07-10-09	Son
Sean Mcklain Paulo	10-24-12	Son

This card is non-transferable and valid for until.

☐ 2019 ☐ 2020 ☐ 2021

Signature

Validated by:
AINA MARIE F. FERRIOL

NATIONAL STATISTICS OFFICE

MUNICIPAL FORM No. 102—(Revised Dec. 1, 1968) (TO BE ACCOMPLISHED IN DUPLICATE)

REPUBLIC OF THE PHILIPPINES

CERTIFICATE OF LIVE BIRTH

(FILL OUT COMPLETELY, ACCURATELY, LEGIBLY IN INK OR TYPEWRITER)

Province: Palawan
City or Municipality: Coron

Register Number:
(a) Civil Registrar-General No.
(b) Local Civil Registrar No. 219(L-77)

1. PLACE OF BIRTH
a. Province: Palawan
b. City or Municipality: Coron
c. Name of Hospital or Institution (If not in hospital, give street address): At home
d. Is Place of Birth Inside City Limits? Yes ☐ No ☑

2. USUAL RESIDENCE OF MOTHER (Where does mother live?)
a. Province: Palawan 5309
b. City or Municipality: Coron 5309
c. Number and Street: Central 1
d. Is Residence Inside City Limits? Yes ☐ No ☑
e. Is Residence on a Farm? Yes ☐ No ☑ 1

CHILD
3. Name (Type or print): First Ellen Middle Sandoval Last Custodio 10
4. Sex: Female
5a. Type Birth: Single ☑ Twin ☐ Triplet ☐
5b. If Twin or Triplet, Which Child: 1st ☐ 2nd ☐ 3rd ☐
6. Date of Birth: Month Nov. Day 22 Year 1977 22

FATHER
7. Name: First Renato Middle Pastrana Last Custodio
8. Religion: R. Cath
9. Citizenship: Filipino
10. Race: Brown 77
11. Age (At time of this birth): Years 22
12. Birthplace: Coron, Palawan
13a. Usual Occupation: Fisherman
13b. Kind of Business or Industry: 1

MOTHER
14. Maiden Name: First Josefina Middle Diaz Last Sandoval
15. Religion: R. Cath
16. Citizenship: Filipino
17. Race: Brown 22
18. Age (At time of this birth): Years 21
19. Birthplace: Coron, Palawan
20. Previous Deliveries to Mother (Do not include this birth): 6 49
a. How many children are now living? 2
b. How many other children were born alive but are now dead? —
c. How many fetal deaths (losses before birth, death any time after conception)? 21

17a. Informant's Signature:
b. Name in Print: Renato P. Custodio
c. Address: Coron, Palawan

18. Mother's Usual Residence (Barrio, Street, City or Municipality, Province): Coron, Palawan 2

ATTENDANT AT BIRTH

19. I hereby certify that I attended the birth of this child who was born alive at 3:00 o'clock P.M. on the date above indicated.
a. Signature:
b. Name in Print: Nicanora Candolo
c. Address:

d. Date Signed by Attendant at Birth: 11-29-77 2
e. Title of Attendant at Birth: ☐ M. D. ☐ Midwife ☐ Nurse ☐ Others (Specify) 2

[illegible] Added from Supplemental Report:

a. Signature:
b. Name in Print:
c. Title or Position:
d. Date:

e. Date When Given Place was Supplied: 11-29-77

22a. Length of Pregnancy: 40 Completed Weeks
22b. Weight at Birth: 6 Lbs. Oz.
23. Legitimate: ☑ Yes ☐ No

24. Date and Place of Marriage of Parents (For legitimate birth): Month Aug. Day 3 Year 1974 City or Municipality: Coron Province: Palawan

25. This Certificate is Prepared by:
Signature: Nicanora Candolo
Name in Print: Nicanora Candolo
Title or Position: Rural Midwife
Date: 11-29-77

(SPACE FOR MEDICAL AND HEALTH ITEMS FOR SPECIAL PURPOSES)

0551

RESERVE FOR BINDING

02581-55-003MGD-03079-BI002

BEST POSSIBLE IMAGE

T0030258100303079012520070 02

BReN
05309-A77XN01-5

CARMELITA N. ERICTA
Administrator and Civil Registrar General
National Statistics Office

NATIONAL STATISTICS OFFICE

MUNICIPAL TREASURER REC'D 8/5/74 CORON, PALAWAN

Municipal Form No. 97 — (Form No. 13) Registry No. 48(274)

MARRIAGE CONTRACT

City or Municipality of Coron Province of Palawan

	Husband	Wife
Contracting Parties	Renato Custodio	Joselyn O. Sandoval
(a) Age (Date of birth)	19 years Jan.11,1955	17 yrs. Sept. 28, 1957
(b) Nationality	Filipino	Filipina
(c) Residence	Bagtong, Busuanga, Pal.	Coron, Palawan
(d) Place of birth	Coron, Palawan	Coron, Palawan
Single, widowed or divorced	Single	Single
Father	Laureano Custodio	Antonio Y. Sandoval
Nationality	Filipino	Filipino
Mother	Isabel F. Custodio	Lilia O. Sandoval
Nationality	Filipina	Filipina
Witnesses	Ricardo Lim Jose Sandoval	Lourdes P. Prosellia Barrocoso
Residence	Coron, Palawan	Coron, Palawan
Persons who gave consent or advice	Laureano Custodio	Antonio Sandoval
(a) Residence	Bagtong, Bus. Pal	Coron, Palawan
(b) Relation to contracting party	Father	Father

64
29
19
17
1
1
1
1

Place of marriage {Office of the / House of / Barrio of / Church of} St. Augustine, Coron, Palawan

Date of marriage August 3, 1974

Marriage solemnized by Rev. Fr. Jose M. Dalfin

(a) Parish Priest (Position) (b) Coron, Palawan (Address)

THIS IS TO CERTIFY: That I, Renato Custodio and I, Joselyn Sandoval on the date and at the place above given, of our own free will and accord, and in the presence of the person solemnizing this marriage and of the two witnesses named below, both of age, take each other as husband and wife.

And I, Rev. Fr. Jose M. Dalfin, Parish Priest (Position)

CERTIFY: That on the date and at the place above written the aforesaid Renato Custodio and Joselyn Sandoval were with their mutual consent lawfully joined together in holy matrimony by me in the presence of said witnesses, both of age; and I further certify that the Marriage License No. 224802, issued at Coron, Pal on August 2, 1974 in favor of said parties, was exhibited to me or no marriage license was exhibited to me, this marriage being of an exceptional character performed under Art. _____ of Rep. Act 386; and that consent or advice to such marriage was duly given, as required by law, by the person or persons above mentioned.

IN WITNESS WHEREOF, we signed, (or marked with our fingerprint) this certificate in triplicate this 3rd day of August, 19 74

Renato Custodio (Contracting Party)

Joselyn Sandoval (Contracting Party)

Rev. Fr. Jose M. Dalfin (Judge, Justice of the Peace, Mayor, Priest, Minister, etc.)

Appointed by _____

My Commission expires on 12/31/75

Witnesses: Ricardo Lim, Jose Sandoval

Lourdes P. Prosellia Barrocoso

(See back)

124

03229-80-003JKO-02629-MI002

BEST POSSIBLE IMAGE

CARMELITA N. ERICTA

TAX DECLARATION OF REAL PROPERTY

TD No. 09-002-0010

Property Indentification No. 066-09-002-01-008-(B1)

Owner: RENATO CUSTODIO

Address: BGY. POBLACION II, CORON, PALAWAN

TIN:

Administrator/Beneficial User:

Telephone No.

Address

TIN:

Telephone No.

Location of Property: 151 NATIONAL HIGHWAY (Number and Street) BARANGAY POBLACION II (Barangay/District) CORON, PALAWAN (Municipality & Province)

OCT/TCT/CLOA No. 314 PART

CCT:

Date:

Survey No. CAD 33

Lot No. 66 PART

Blk. No.

Boundaries:

North: BGY. POB IV

South: ALN 011

East: ALN 005

West: ALN 007

KIND OF PROPERTY ASSESSED:

☑ LAND

☑ BUILDING

No. of Storeys:

Brief Description:

☐ MACHINERY

Brief Description:

☐ Others

Specify:

Classification	Area	Unit Value		Market Value	Actual Use	Assessment Level		Assessed Value	Taxable
Commercial, C-1	150.00 sq.m.	2,220	Php	561,840.00	COMMERCIAL	20 %	Php	116,330.00	TAXA
Building	71.25 sq.m.	740	Php	37,962.00	RESIDENTIAL	0 %		0.00	TAXA
Total	221.25 sq.m.		Php	619,802.00			Php	116,330.00	

Total Assessed Value: ONE HUNDRED SIXTEEN THOUSAND THREE HUNDRED THIRTY PESOS (Amount in Words)

Taxable ☑ Exempt ☐

Effectivity of Assessment/Reassessment: 2014 Year

Approved: By Authority of the Provincial Assessor

REYNARIO R. LABRADOR
MUNICIPAL ASSESSOR

9/5/2013
Date

This declaration cancels TD No. 002-0010-C Previous A.V. Php 48,470.00 Previous PIN 066-09-002-01-008-B1

Previous Owner: RENATO CUSTODIO Previous Area 221.25 sq.m.

Memoranda:

REVISED PURSUANT TO SECTION 219 OF RA 7160 AND SECTION 23 OF PROVINCIAL ORDINANCE NO. 1281-12, SERIES OF 2012.

THIS PROPERTY IS DELINQUENT IN THE PAYMENT OF TAXES AMOUNTING TO P 8,071.49 COVERING THE PERIOD FROM 2006 TO 20 PER WARRANT OF LEVY ISSUED BY THE PROVL. TREASURER OF PALAWAN ON OCT. 18, 2009. (SGD) NERRIE G. RODRIGUEZ PROVL. ASSESSOR

Note: This declaration is for real property taxation purposes only and the valuation indicated herein are based on the schedule of unit market values prepa for the purpose and duly enacted into an Ordinance by the Sangguniang Panlalawigan under Ordinance No. 1281-12 dated November 8, 2012. It d not and cannot by itself alone confer any ownership or legal title to the property.

RPA FORM NO. 1
TAX DECLARATION NO. 002-0010-C

PROPERTY INDEX NO. 066-09-002-01-008B1

DECLARATION OF REAL PROPERTY
(FILED UNDER REPUBLIC ACT NO. 7160)

Owner: RENATO CUSTODIO — Address: Bgy. Poblacion II, Coron, Palawan

Administrator: _____ — Address: _____

DESCRIPTION AND OTHER PARTICULARS OF PROPERTY

Location of Property: 151 Nat'l Highway (Number & Street) Bgy. Poblacion II (Barangay/District) Coron, Palawan (Municipality/City/Province)

Certificate of Title No. 314 part — Cadastral Lot No. 66 part, Cad33 — Assessor's Lot No. 008B1/01

Boundaries:

North: Bgy. Pob. IV — South: ALN 011

East: ALN 009 — West: ALN 007

(State streets, lots, or streams by which bounded, or names of owners of adjoining lands)

I (a) LAND (AGRICULTURAL/MINERAL)

OWNER'S DECLARATION			ASSESSOR'S FINDINGS				
Kind	Area	Value	Kind	Area	Class	Unit Values	Market Value

I (b) PLANTS & TREES

OWNER'S DECLARATION			ASSESSOR'S FINDINGS			
Kind	No./Area	Value	Kind	No./Area	Unit Value	Market Value

Market Value _____ 100%
Adjustments
(a) Along or no rd frontage _____ %
(b) kms. to all weather rd _____ %
(c) kms. to market (pob) _____ %
Total Adjustments _____ %
Adjusted Market Value _____ %

Total ₱
Total for land, plant and tress ₱
Adjusted value for land, plants and trees ₱

II LAND (RESIDENTIAL, COMMERCIAL, INDUSTRIAL, SPECIAL)

OWNER'S DECLARATION			ASSESSOR'S FINDINGS				
Kind	Area	Value	Kind	Area	Unit Values	Adjustments	Market Value
			Comm'l lot	150	1,850.00	C-1	277,500.00
			2nd strip	140	1,480.00	80%	207,200.00
Total		₱	Total	290sqm			₱ 484,700.00

IMPORTANT: Issued for taxation purposes only and should not be considered as title to the property

National Legal Process of Appeal
(NALEPAP)

Photo taken date: November 30, 2022
Bgy. Poblacion 2, Coron, Palawan

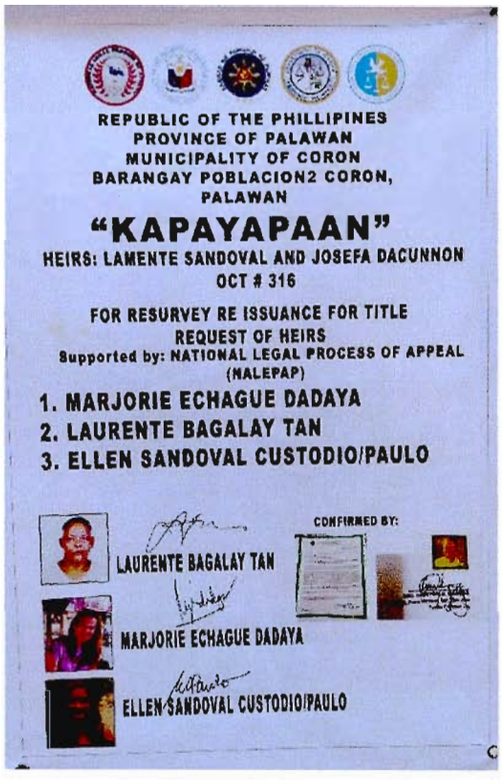

Nobyembre 25, 2022

_____

_____

_____

KAPAYAPAAN,

Ako si **MARJORIE ECHAGUE DADAYA** nasa wastong gulang pangalawa sa sampung anak nina **G. EGARDO T. DADAYA SR.** at **GNG. LOURDES ECHAGUE DADAYA**, nakatira sa Barangay Borac, Coron, Palawan. Na ako ay mayroong *Special Power of Attorney (SPA)* sa lupang manahin na matatagpuan sa Barangay Poblacion 2, Coron, Palawan.

Bilang patunay ng pagmamay-ari ng lupa nina **SPS. LAMENTE SANDOVAL** *(patay na)* at **JOSEFA DACUNNON** *(patay na)* na may **Tittle No. 316**, **Tax Declaration No. 18-09-022-0256** na naka-*full payment under the name of* **LAURENTE TAN**.

Na ako ay binigyan ng *Special Power of Attorney (SPA)* ng aking mga lolo at lola para magtayo ng bahay sa nasabing lupang manahin na matatagpuan sa Barangay Poblacion 2, Coron, Palawan. Na si **G. RAMIRO TAN** *(patay na)* ay isa sa nagbigay ng awtorisasyon para magtayo kami ng bahay sa nasabing lupa na matatagpuan sa tabi ng bahay nina **G. RENATO CUSTODIO** at ni **GNG. JOSEFA TAN LELIS** na anak ni **G. RAMIRO TAN** *(patay na).*

Taong 2005 noong simula naming ukupain ang lugar kasama ang aking pamilya sa nasabing lugar, maglalabing-pitong (17) taon na kaming naninirahan dito hanggang sa kasalukuyan. Lumapit ako sa inyong tanggapan upang mabigyang solusyon ang matagal ng problema sa lupang manahin.

Labis akong nag-aalala sa aming sitwasyon dahil dito kami nakatira kasama ang aking mga kapatid, mga magulang na senior citizen na, at mga kamag anak na nag-aaral. Dumulog ako sa inyong tanggapan upang maiwasan na ang hindi kanaisnais na panggugulo nina Eric Echague.

Batay sa mga nangyari ay maraming beses na kaming nagkaharap sa barangay upang ayusin ito. Subalit patuloy pa rin na hindi nagkakasundo hanggang sa kasalukuyan ang ibang usapin ay nakahabla na sa tanggapan ng barangay at patuloy ang proseso ng reklamong kriminal laban sa kanilang pagpasok na walang abeso o pahintulot mula sa amin.

Sumulat ako sa inyo para humingi ng tulong dahil sa hindi na kami ligtas (safety) sa aming tahanan, simula noon hanggang ngayon, lalo na ang pagbigay ng Fencing Permit ng LGU ng Coron, Palawan simula sa:

Barangay Captain ng Poblacion 2 Coron, Palawan na si OSCAR AMIT JR. ay nagbigay ng BARANGAY CERTIFICATION, ang nakalahad na pangalan dito ay hindi ko kilala at ako ang binigyan ng karapatan na magtayo ng bahay sa nasabi nilang bakuran at ako ang may ari ng bahay dahil kami ang nakatira sa lupang manahin sa Brgy. Poblacion 2 Coron, Palawan hanggang sa kasalukuyan sa loob ng 17 years.

Narito po ang mga dokumentong handa kong ipresenta para sa kaalaman ng lahat;

1. Photocopy Titulo No. 316 of **LAMENTE SANDOVAL** *(patay na)* at **JOSEFA DACUNNON** *(patay na)* na may **Tittle No. 316**, **Tax Declaration No. 18-09-022-0256.**
2. Special Power of Attorney (SPA) of Marjorie E. Dadaya at kami ay gumawa ng aming bahay noong March 13, 2007.
3. Tax Declaration Number 002-0322-R of Real Property of Marjorie E. Dadaya August 12, 2015.
4. Barangay for building permit issued June 5, 2015 name Marjorie E. Dadaya.
5. Claimed tittle no. 316 copy at the Register of Deeds OR NO. 1017208200 November 21, 2018 and memorandum of Encumbrances Entry no. 2014001236.
6. Petition for the reissuance of the owner's duplicate copy of original certificate of the tittle (OCT)No. 316 by Alfonso Pamado, represented by Isabelita P. San Jose, land Case No. 2427.
7. Petition for the reissuance of the owner's duplicate copy of original certificate of the tittle (OCT)No. 316 by Alfonso Pamado, represented by Isabelita P. San Jose, land Case No. 2427, Decision.
8. Extrajudicial Settlement of Estate of the Late Spouses Lamente Sandoval and Josefa dacunnon by the heirs.
9. issued fencing permit to Eric Echague and Gostavo Torres issued June 26, 2019.
10. Extra judicial settlement of state of the late Lamente Sandoval and Josefa Dacunon with waiver of rights. January 31, 2019.
11. Affidavit of Adverse Claim of Marietta Sandoval, Ferrera and Florina Sandoval Ferrera June 15, 2019.
12. Special Power of Attorney (SPA) of Edgardo T. Dadaya at ang sinumpaang salaysay pattungkol sa pagperma ni Jose Dadaya kahit matagal ng patay sa extrajudicial July 12, 2019.
13. Letter for Engineer Ike D. Parangue, July 25, 2019.
14. Letter for Engineer Michael Adrian F. Fababeir Regarding for location clearance July 25, 2019.
15. Response Letter from Engineer Michael Adrian F. Fababeir regarding for location clearance to Eric Echague, July 25, 2019.
16. Letter for Engineer Ike D. Parangue regarding the three occupants confirmed that no location clearance issued for Eric Echague and Gostavo Torres, July 29, 2019.
17. Letter for Arnoldo A. Blaza Jr.regarding to issue certification of land classification July 30, 2019.
18. Letter of response from Arnoldo A. Blaza Jr.regarding to issue certification of land classification.
19. Letter for Engineer Ike D. Parangue tungkol s ana sila Eric Echague at Gostavo Torres ay walang locational clearance three occupants confirmed that no location clearance issued for Eric Echague and Gostavo Torres, July 20, 2019.
20. Letter for kapt. Oscar Amit na mayroong problema ang lupang kanilang babakurin sa barangay Poblcaion 2, Coron, Palawan, August 1, 2022.
21. Letter for Kapt. Oscar Amit patungkol sa nabistong problema ng kanilang dokumento sa pagpapabakod, August 5, 2019.

22. Letter for Daniel Florida patungkol sa kanilang certification na inisyu ni kapitan, August 5, 2019.
23. Bilang aktwal occupant binakod ko ang aking sariling bakuran, August 7, 2019.
24. Humingi kami ng payong legal sa office of the PAO tungkol sa naisyung fencing permit kina Eric Echague at Gostavo Torres at sinagot ng PAO ang aming sumbong hingil sa fencing permit, August 16, 2019.
25. Official Receipt no. 0303129 of land tax payment by Marjorie E. Dadaya, Redemto Echague, Jeffrey Echague. September 30, 2019.
26. Land Tax Declaration of Real Property No. 18-09-002-0256 owner name SPS Lamente Sandoval and Josefa Dacunon, OCT no. 316.
27. Land tax Declaration No. 5675436 of real property full payment October 10, 2022.
28. Fencing permit no. FN-04-0322100005 of Eric Echague, October 20, 2022.
29, TAX CLEARANCE in the name of SPS, LAMENTE SANDOVAL & JOSEFA DACUNNON registered owner of real property under TAX DECLARATION No, 18-09-002-0256 located at Brgy. Poblacion 2, Coron, Palawan
30. LTVS Land Tax Verification Slip with the current T, D
No. 18-09-002-0256 Location at Barangay Poblacion 2 Coron, Palawan.
31. ORIGINAL CERTIFICATE OF TITLE issued on Oct. 7 2022 from PPC Puerto Princesa City. In the name of SPS. LAMENTE SANDOVAL & JOSEFA DACUNNON registered owner of real property under TAX DECLARATION NO. 18-09-002-0256 located at Brgy, Poblacion 2, Coron, Palawan

Hangad ko ang agarang aksiyon at patas na solusyon nang walang kinikilingan sa inyong serbisyong publiko patungkol sa usaping ito. Maraming salamat!

Lubos na gumagalang,

MARJORIE E. DADAYA
Complainant

Republic of the Philippines
Province of Palawan
Municipality of Coron
OFFICE OF THE MUNICIPAL TREASURER

TAX CLEARANCE

December 1, 2022
Date

To Whom It May Concern:

THIS IS TO CERTIFY that **SPS. LAMENTE SANDOVAL & JOSEFA DACUNNON** are the registered owners of real property/ies under Tax Declaration No. **18-O9-OO2-O256** located **Brgy. Poblacion 2, Coron, Palawan** with an assessed value of **P/1,127,920.00.**

This certifies further that the realty taxes due the above property/ies have been paid for the current and previous years, to wit:

O.R. No.	Amount Paid	Date Paid	Years Paid

NOTE: Taxes from **2010** to **2022** are fully paid as per verification slip hereto attached.

Issued upon the request of Mr./s Marjorie E. Dadaya for tax clearance purposes paying the amount of P/300.00 as Tax Clearance fee paid under O.R.No. 2555560 dated December 1, 2022.

SAMUEL D. ALARCON
Municipal Assessor

ANDREW VICENTE L. GARCELLANO
Assistant Municipal Treasurer

LAND TAX VERIFICATION SLIP
Current T. D. No. 18-09-002-0256

PIN: 066-09-002-01-009 LOCATION: Bgy. Poblacion 2 Municipality of CORON

DECLARED OWNER	T. D. No.	Taxable Year	ASSESSED VALUE	REALTY TAX DUE		PENALTY	O.R. No.	DATE
				BASIC	SEF			
SPS. LAMENTE SANDOVAL & JOSEFA DACUNNON	18-09-002-0256	2010	306,500.00	3,065.00	3,065.00	4,413.60	4291323	8/11/2022
-do-	18-09-002-0256	2011	306,500.00	3,065.00	3,065.00	4,413.60	4291323	8/11/2022
-do-	18-09-002-0256	2012	306,500.00	3,065.00	3,065.00	4,413.60	4291323	8/11/2022
-do-	18-09-002-0256	2013	306,500.00	3,065.00	3,065.00	4,413.60	4291323	8/11/2022
-do-	18-09-002-0256	2014	367,800.00	3,678.00	3,678.00	5,296.32	4291323	8/11/2022
-do-	18-09-002-0256	2015	367,800.00	3,678.00	3,678.00	5,296.32	4291323	8/11/2022
-do-	18-09-002-0256	2016	367,800.00	3,678.00	3,678.00	5,296.32	4291323	8/11/2022
-do-	18-09-002-0256	2017	367,800.00	3,678.00	3,678.00	5,296.32	4291323	8/11/2022
-do-	18-09-002-0256	2018	367,800.00	3,678.00	3,678.00	5,296.32	4291323	8/11/2022
-do-	18-09-002-0256	2019	1,127,920.00	11,279.20	11,279.20	16,242.05	4291323	8/11/2022
-do-	18-09-002-0256	2020	1,127,920.00	11,279.20	11,279.20	14,437.38	4291323	8/11/2022
-do-	18-09-002-0256	2021	1,127,920.00	11,279.20	11,279.20	9,023.36	4291323	8/11/2022
-do-	18-09-002-0256	2022	1,127,920.00	11,279.20	11,279.20	3,609.36	4291323	8/11/2022

PREPARED BY

MAYNARD B. REYES
Admin Aide III

CERTIFIED CORRECT:

SAMUEL D. ALARCON
Municipal Assessor

ANDREW VICENTE L. GARCELLANO
Assistant Municipal Treasurer

TC: DC

TAX DECLARATION OF REAL PROPERTY

T.D. No.: 18-09-002-0256 Property Identification No.: 066-09-002-01-009-.

Owner: SPS. LAMENTE SANDOVAL AND JOSEFA DACUNNON TIN:

Address: BARANGAY POBLACION II, CORON, PALAWAN Telephone No.:

Administrator/Beneficial User: TIN:

Address: Telephone No.:

Location of Property: BARANGAY POBLACION II CORON, PALAWAN

(Number and Street) (Barangay/District) (Municipality & Province)

OCT/TCT/CLOA No. OCT NO. 316 Survey No.

CCT: Lot No. 68

Date: 10-04-1917 Block No.

Boundaries: North: BGY. POB. IV South: ALN 011

East: ALN 010 West: ALN 008 & 011

KIND OF PROPERTY ASSESSED:

☑ LAND

☐ BUILDING
No. of Storeys:
Brief Description:

☐ MACHINERY
Brief Description:

☐ Others:
Specify:

Classification	Area	Unit Value	Market Value	Actual Use	Assessment Level	Assessed Value	Taxabil
COMMERCIAL (C-2)	1,226.00 sq.m	4,600 Php	5,639,600.00	COMMERCIAL	20 %	Php 1,127,920.00	TAXABI
Total	1,226.00 sq.m		Php 5,639,600.00			Php 1,127,920.00	

Total Assessed Value ONE MILLION ONE HUNDRED TWENTY-SEVEN THOUSAND NINE HUNDRED TWENTY PESOS

(Amount in Words)

Taxable ☑ Exempt ☐ Effectivity of Assessment/Reassessment: 2020 YEAR

Approved by:

EUVICA M. COLBE, REA
PROVINCIAL ASSESSOR

4/15/2019
Date

This declaration cancels TD No. NEW Previous A.V. Php. 0.00 Previous PIN: NONE

Previous Owner: NONE Previous Area: 0 sq.m.

Memoranda:

DECLARED PER OCT NO. 316 ISSUED ON OCTOBER 04, 1917 SWORN STATEMENT FILED. LATE FILING OF SS: P5,000.00, O.R NO. 1168328, ISSUED ON APRIL 15, 2 AT PUERTO PRINCESA CITY. SUBJECT TO TEN (10) YEARS BACK TAXES BASED ON THE ASSESSED VALUE SHOWN BELOW. NO PENALTY IF PAID ON OR BEFORE SEPTEMBER 30, 2019.

Assessed Value subject to tax:

Year Covered	Assessed Value
2010-2013	306,500.00
2014-2018	387,800.00
2019	1,127,920.00

Note: This declaration is for real property taxation purposes only and the valuation indicated herein are based on the schedule of unit market values prepared f the purpose and duly enacted into an Ordinance by the Sangguniang Panlalawigan under Ordinance No. 1914-2018 dated March 26, 2018. It does not and cannot by itself alone confer any ownership or legal title to the property.

SWORN STATEMENT No.: 066-09-551
SWORN STATEMENT Date: 04-15-2019

Machine Validation: Printed by Kerwin M. Gabayan/ 4:25:18 PM

Change 00

ACCOUNTABLE FORM NO. 51-C
Revised January, 1992 (ORIGINAL)

Official Receipt of the Republic of the Philippines

№ 2555560 L

Date December 01, 2022

Agency MTO-CORON Fund 01

Payor MARJORIE E. DADAYA

Nature of Collection	Account Code	Amount
Tax Clearance	4-02-01-040-G	P 150.00
Verification Fees	4-02-01-110-A	P 150.00
Remarks:		
TOTAL		P 300.00

Amount in Words

	Drawee Bank	Number	Date
☐ Cash			
☐ Check			
☐ Money Order			

Received the amount stated above.

YOLANDA Q. GESTA

WOREN VICENTE L. GARCELLANO
Acting Municipal Treasurer

YOLANDA / 12/01/22 13:12 5[illegible]

Collecting Officer

NOTE: Write the number and date of this receipt on the back of check or money order received.

UNOFFICIAL COPY IF NOT IN BLUE COLOR

ORIGINAL CERTIFICATE OF TITLE

OFFICE OF THE REGISTRY OF DEEDS FOR THE PROVINCE OF [illegible]

[illegible]

United States of America

GOVERNMENT COPY • GOVERNMENT COPY • GOVERNMENT COPY

This is a Certified True Copy of OCT 316 on file at Registry of Deeds of Province of Palawan. This consists of 3 page(s) and does not require a manually affixed signature pursuant to R.A. No. 8792. Printed at Registry of Deeds of Province of Palawan. Requested By: EARL SIANSON.

Ref. No. : 2022006421 OR No. : 1025134441
Date : 10/11/2022 OR Date : Oct 7 2022
Time : 04:05:15 PM Amt. Paid : 235 16

This title is subject of an on-going transaction with
Entry No. 2019002239
Entry Date. Jul 9 2019 1:38PM.

L R A 1103442116

LTCP Form No.: 0019 version 2
(revision date: 2017.08.03)

OFFICIAL COPY IF NOT IN BLUE COLOR

GOVERNMENT COPY • GOVERNMENT COPY • GOVERNMENT COPY

This is a Certified True Copy of OCT 316 on file at Registry of Deeds of Province of Palawan. This consists of 3 page(s) and does not require a manually affixed signature pursuant to R.A. No. 6732. Filified at Registry of Deeds of Province of Palawan. Requested by: EARL SIANSON.

Ref. No. 2022006421 OR No. : 1025134441
Date 10/11/2022 OR Date : Oct 7 2022
Time : 04:05:15 PM Amt. Paid : 235.16

This title is subject of an on-going transaction with
Entry No. 2019002239
Entry Date: Jul 9 2019 1:36PM.

ND REGISTRATION AUTHORITY CCV FORM
UNOFFICIAL COPY IF NOT IN BLUE COLOR

Judicial Form No. 107

OCT No.: 065-316

Page No.:3

MEMORANDUM OF ENCUMBRANCES

Entry No.: 2014001236 Date:June 16, 2014 10:54:53AM

AFFIDAVIT OF LOSS : EXECUTED BY ALFONSO PAMADO, ATTESTING THAT THE OWNER'S DUPLICATE OF TITLE WAS LOST, IN ACCORDANCE WITH DOC. NO. 04; PAGE NO. 01; BOOK NO. LII; SERIES OF 2014, OF NOTARY PUBLIC OF CORON, PALAWAN, ATTY. RONALD J. CARANDANG, DATED JUNE 9, 2014.

ATTY. MARICAR O. MISA-TAN
Register of Deeds II - Palawan Province

THE REGISTERED OWNER IS REMINDED TO UPGRADE THE "PAPER TITLE" TO "COMPUTERIZED TITLE" FOR FASTER TRANSACTIONS.

GOVERNMENT COPY • GOVERNMENT COPY • GOVERNMENT COPY

LRA 1103442118

This is a Certified True Copy of OCT 316 on file at Registry of Deeds of Province of Palawan. This consists of 3 page(s) and does not require a manually affixed signature pursuant to R.A. No. 8792. Printed at Registry of Deeds of Province of Palawan. Requested By EARL SIANSON.

Ref. No.: 2022006421 OR No. : 1025134441
Date : 10/11/2022 OR Date : Oct 7 2022
Time : 04:05:15 PM Amt. Paid: 235.16

This title is subject of an on-going transaction with
Entry No. 2019002239
Entry Date: Jul 9 2019 1:36PM.

Accountable F
(Revised 2008)

REPUBLIC OF THE PHILIPPINES
DEPARTMENT OF JUSTICE
LAND REGISTRATION AUTHORITY

Date: November 21, 2018
Entry/Ref No.: EPEB_CCV/2018007264

OFFICIAL RECEIPT
1017208200
Issuing Office: Province of Palawan

Received From (Last Name, First Name, Middle Initial)
MARJORIE DADAYA

X Address (No., Street, City/Municipality, Province, Zip Code)

PAYMENT DETAILS	BREAKDOWN OF PAYMENT	
TX018-Titles	Issuance Fee (Certified True	
*** Nothing Follows ***	Copy)	42.00N
	IT Service fee - Issuance Fe	193.16V
	*** Nothing Follows ***	

TOTAL AMOUNT PAID → 235.16

THE SUM OF (in Pesos) TWO HUNDRED THIRTY FIVE AND 16/100 ONLY

MODE OF PAYMENT ☐ Cash ☐ Check ☐ Money Order ☐ Credit/Debit Card ☐ Others

Bank/Company	Ref. No.	Date	Amount
CASH			235.16

CLAIMED
11/23/18

Edna O. Heredero
CASHIER

Write the number and date of this receipt on the back of check or money order received.

REGISTRATION AUTHORITY CCV FORM
UNOFFICIAL COPY IF NOT IN BLUE COLOR

ORIGINAL CERTIFICATE OF TITLE

CERTIFICADO ORIGINAL DE TITULO

No.

OFFICE OF THE REGISTER OF DEEDS FOR THE PROVINCE OF

Entered pursuant to the following Decree:

Decree No.

United States of America

Philippine Islands

Court of First Instance, Province of

G. L. R. O. *Record No.*

having been duly and regularly heard, in accordance with the provisions of law, it is hereby decreed that the conjugal partnership of the spouses,

The owner *in fee simple of certain land situated in said Province of* *more particularly bounded and described as follows:*

A parcel of land (Lot No. 6) of the Cadastral Survey of Taytay, Kalis the Hypothecate Contract, situated in the township of Taytay, bounded on the NE. by Lot No. 5, on the SE. by Lot No. 8, on the SW. by Lot No. 10, and on the NW. by Lot No. 7, containing an area of [illegible] square meters (12247), more or less. All points referred to are indicated on the plan, bearings true. Evaluation 1 Dec. [illegible] Date of survey, January 2 to January 22, 1918.

Therefore, it is ordered by the Court that said land be registered in accordance with the provisions of the Land Registration Act in the name of said conjugal partnership of the spouses,

subject however to such of the encumbrances mentioned in article [illegible] of said Act as may be subsisting, and to a lien in favor of the Philippine Government to guarantee the payment of the special taxes assessed pursuant to the provisions of Sec. [illegible] of Act [illegible].

Witness the Honorable *Judge of said Court,*

the *day of* *April* *A. D. nineteen hundred and* *[illegible]*

Issued at Manila, P. I., on *day of* *A. D. 19[illegible]*

at hours [illegible] M.

ATTEST:

Received for transcription at the office of the Register of Deeds for the Province of

on *day of* *A. D. 19[illegible]*

at *M.*

Register of Deeds

LRA 1059637783

It is hereby certified that this is a true electronic copy of **OCT 316** on file in **Registry of Deeds of Province of Palawan**, which consists of 3 page(s).This is a system generated Certified True Copy, and does not require a manually-affixed signature. Printed at **Registry of Deeds of Province of Palawan**. Requested By: **MARJORIE DADAYA**

Ref. No. : 2018007264 OR No. : 1017208200
Date : 11/23/2018 OR Date : Nov 21 2018
Time : 10:24:37 AM Amt. : 235.16

CONTINUATION OF THE DESCRIPTION
INFORMATION TO BE ENDORSED

MEMORANDUM of the Incumbrances Affecting the Property Described in this Certificate.

MEMORANDUM de las cargas y gravámenes a que está afecto el inmueble que se describe en este Certificado.

It is hereby certified that this is a true electronic copy of **OCT 316** on file in **Registry of Deeds of Province of Palawan**, which consists of **3** page(s).This is a system generated Certified True Copy, and does not require a manually-affixed signature. Printed at **Registry of Deeds of Province of Palawan**. Requested By: **MARJORIE DADAYA**

Ref. No.	: 2018007264	OR No.	: 1017208200
Date	: 11/23/2018	OR Date	: Nov 21 2018
Time	: 10:24:37 AM	Amt	: 235.16

EXTRAJUDICIAL SETTLEMENT
OF ESTATE OF THE LATE LAMENTE SANDOVAL & JOSEFA DACUNON
WITH WAIVER OF RIGHTS

KNOW ALL MEN BY THESE PRESENTS:

On the Extrajudicial Settlement of Estate

This **EXTRAJUDICIAL SETTLEMENT OF ESTATE** is made and entered into by and among:

ALFONSO PAMADO, SR., Filipino, of legal age, married to **ROSA T. PAMADO** and a resident of Borac, Coron, Palawan; and

LITA E. ESCARDA, Filipino, of legal age, married to **LAURO ESCARDA** and a resident of Coron, Palawan, hereafter collectively referred to as the **"HEIRS"**

WITNESSETH:

I. That the above-named persons are the legitimate heirs of the late spouses **LAMENTE SANDOVAL and JOSEFA DACUNNON**, who died intestate in the year 1939 at Coron, Palawan and in the year 1918 at Coron, Palawan, respectively;

II. That the deceased, at the time of their death, left a parcel of land located at Coron, Palawan, covered by Original Certificate of Title No. 316, containing a total land area of **ONE THOUSAND TWO HUNDRED TWENTY SIX (1,226) SQUARE METERS,** more particularly described and bounded as follows, to wit:

Lot 68, Cad 33, Coron Cadastre

"A parcel of land (Lot 68 of the cadastral survey of Coron), with the improvements thereon, situated in the township of Coron.

Bounded on the NE., by Calle Burgos; on the SE., by Lot 69; on the SW., by Lot Nos. 69 & 66; and on the NW by Calle San Jose.

Beginning at a point marked "1" on plan, being N. 64 deg. 46'W., 144.60 m. from B.L.B.M. No.1

Thence N.78 deg. 09'E., 24.80 m. to point 2;
Thence N.11 deg. 22'W., 45.30 m. to point 3;
Thence S. 79 deg. 47'W., 31.92 m. to point 4;
Thence S. 25 deg. 26' E., 32.37 m. to point 5;
Thence S. 8 deg. 27'E., 14.77 m. to the point of beginning.
Containing an area of ONE THOUSAND TWO HUNDRED AND TWENTY SIX (1,226) SQUARE METERS, more or less. All points referred to are indicated on the plan; bearings true."

III. That no personal properties are involved in this extrajudicial settlement.

IV. That to the best knowledge and information of the parties hereto, the said deceased left no debts.

CERTIFIED TRUE / XERUX COPY
DATE 01-31-19
ATTY. SABRINA RACHEL P. ORDIL
CLERK OF COURT V

V. That the parties herein being both of legal age and with full civil capacity to contract hereby by these presents adjudicate as they hereby adjudicate between themselves, PRO INDIVISO the above-described parcel of land.

B. ON THE WAIVER OF RIGHTS

VI. That, due to pure liberality and magnanimity to **MARIA TAN TORRES**, Filipino, of legal age, widow, and a resident of Metro Manila; **WILFREDO P. DERA**, Filipino, of legal age, single, and a resident of Metro Manila; **OSCAR P. DERA**, Filipino, of legal age, married to SANIROSE DERA, and a resident of Metro Manila; **ALFONSO PAMADO, JR.**, Filipino, of legal age, married to JOCELYN M. PAMADO, and a resident of Coron, Palawan; **ALFONSO PAMADO SR.**, Filipino, of legal age, married to ROSA T. PAMADO, and a resident of Coron, Palawan, **MA. NELLY P. DUSONG**, Filipino, of legal age, married to EMILIO DUSONG, and a resident of Coron, Palawan, **ISABELITA P. SAN JOSE**, Filipino, of legal age, widow, and a resident of Coron, Palawan; **LINDA GERARDINE J. RAMOS**, Filipino, of legal age, married to JOSE RAMOS, and a resident of Coron, Palawan; and **LEO PAMADO**, Filipino, of legal age, married to MARIANNE PAMADO, and a resident of Coron, Palawan (all referred to as the "WAIVEE") the following portions of the adjudicated parcels of land based on subdivision plan PSD _____, namely:

1. To MARIA TAN TORRES, Lot 68- F, measuring 176.58 SQUARE METERS;
2. To WILFREDO P. DERA and OSCAR P. DERA, Lot 68-E, measuring 85.63 SQUARE METERS;
3. To ALFONSO PAMADO, JR., Lot 68-B, measuring104.12 SQUARE METERS;
4. To ALFONSO PAMADO SR., Lots 68-I, measuring 69.66 SQUARE METERS and Lot 68-J, measuring 31.36 SQUARE METERS;
5. To MARIA NELLY P. DUSONG, Lot 68- D measuring 85.63 SQUARE METERS;
6. To ISABELITA P. SAN JOSE, Lot 68-C, measuring 85.63 SQUARE METERS;
7. To LINDA GERARDINE J. RAMOS, Lot 68-A, measuring 176 SQUARE METERS;
8. To LEO PAMADO, Lot 68-G, measuring 205.44 SQUARE METERS; and
9. To LITA E. ESCARDA, Lot 68-H, measuring 131.62 SQUARE METERS

VII. That, henceforth, they can appropriate and convey freely for themselves, and for any person/s they may choose, that their respective shares from the said estate free of any restrictions or objections from us;

VIII. That, we forever defend their rights of ownership and possession in relation to this waiver against claims of third persons;

CERTIFIED TRUE / XEROX COPY
DATE 01-31-19 ATTY. SOFIA

IN WITNESS WHEREOF, the parties hereto have hereunto affixed their hands this __th day of SEP 06 2013 in _____

ALFONSO PAMADO SR.
WAIVOR/HEIR

LITA E. ESCARDA
WAIVOR/HEIR

ACCEPTED BY:

WILFREDO P. DERA
WAIVEE

MARIA TAN TORRES
WAIVEE

ALFONSO PAMADO, JR.
WAIVEE

MARIA NELLY P. DUSONG
WAIVEE

ISABELITA P. SAN JOSE
WAIVEE

LINDA GERARDINE J. RAMOS
WAIVEE

LEO PAMADO
WAIVEE

OSCAR P. DERA
WAIVEE

SIGNED IN THE PRESENCE OF:

ACKNOWLEDGEMENT

REPUBLIC OF THE PHILIPPINES)
MUNICIPALITY OF CORON) Ss.

BEFORE ME, this SEP 06 2013 day of _____ in the Municipality of Coron, Province of Palawan, personally appeared

	COMPETENT EVIDENCE OF IDENTITY
ALFONSO PAMADO SR.	OSCA ID No.0018
LITA E. ESCARDA	OSCA ID No. 0190
ISABELITA P. SAN JOSE	Postal ID No. 9531720
LEO PAMADO	VIN:5309-0068B-K0569LTP10000
MARIA NELLY P. DUSONG	VIN:5309-0036A-J2660MPD20000

Known to me to be the same persons who executed the foregoing instrument, and acknowledged to me that the same is their free act and deed.

CERTIFIED TRUE / XEROX COPY
DATE 01-31-19

ATTY. SABRINA RACHEL P. ORDILLO
CLERK OF COURT V

IN WITNESS WHEREOF, I have hereunto set my hand, the day, year and place above written.

ATTY. ROMAEO J. CARANDANG
Notary Public until Dec. 31, 2014
PTR No. 3147097 / Dec. 26, 2012 / Palawan
IBP No. 892433 / Dec. 28, 2012 / Palawan
Roll No. 56149

Doc No. 276
Page No. 56
Book No. XLII
Series of 2013.

SIGNED IN THE PRESENCE OF:

SECOND ACKNOWLEDGEMENT

REPUBLIC OF THE PHILIPPINES)
PROVINCE OF ZAMBOANGA) Ss.

BEFORE ME, this ___th day of _____ in PROVINCE OF ZAMBOANGA personally appeared

	COMPETENT EVIDENCE OF IDENTITY
ALFONSO PAMADO, JR.	COMELEC # 87257 (CEDULA)
WILFREDO P. DERA	Senior Citizen ID No. 37280
OSCAR P. DERA	Senior ID # 96218
MARIA TAN TORRES	Passport ID # 3891937
LINDA GERARDINE J. RAMOS	

Known to me to be the same persons who executed the foregoing instrument, and acknowledged to me that the same is their free act and deed.

IN WITNESS WHEREOF, I have hereunto set my hand, the day, year and place above written.

ATTY. JAIL L. IMAM
NOTARY PUBLIC
UNTIL DEC. 31, 2013
PTR NO. 1217-1031-2013

Doc No. 537
Page No. 109
Book No. LIII
Series of 2013.

CERTIFIED TRUE / XEROX COPY
DATE 01-31-14

ATTY. SABINA RACHEL P. ORDILLO
CLERK OF COURT V

REY = ALFONSO (NICOLASA, SOLEDAD, SANDALIO)
GRACIA = RAFAELA (SILD BY NICOLASA)
BALANGAR = JUAN
VILLAN = MANUEL (MARIA + PACZAR)

TECHNICAL DESCRIPTION		
LINES	BEARINGS	DISTANCES
BDRY.		
1-2	N.78°09'E.	24.60M.
2-3	N.11°21'W.	45.30M.
3-4	S.78°47'E.	31.53M.
4-5	S.52°26'E.	32.37M.
5-1	S.09°27'E.	14.77M.
Lot 68-A		
1-2	N.11°21'W.	13.98M.
2-3	N.78°47'E.	13.70M.
3-4	S.11°21'E.	13.71M.
4-1	S.78°39'W.	13.70M.
Lot 68-B		
1-2	N.78°39'E.	13.70M.
2-3	S.11°21'E.	7.60M.
3-4	S.78°39'W.	13.70M
4-1	N.11°21'W.	7.60M.
Lot 68-C		
1-2	N.11°21'W.	6.25M.
2-3	N.78°39'E.	13.70M.
3-4	S.11°21'E.	6.25M.
4-1	S.78°39'W.	13.70M.
Lot 68-D		
1-2	N.78°39'E.	13.70M.
2-3	S.11°21'E.	6.25M.
3-4	S.78°39'W.	13.70M.
4-1	N.11°21'W.	6.25M.
Lot 68-E		
1-2	N.11°21'W.	1.94M.
2-3	N.11°21'W.	4.31M.
3-4	N.78°39'E.	13.70M.
4-5	S.11°21'E.	6.20M.
5-1	S.78°39'W.	13.70M.
Lot 68-F		
1-2	N.78°39'E.	13.70M.
2-3	S.11°21'E.	6.24M.
3-4	S.78°08'W.	24.60M.
4-5	N.08°27'W.	8.31M.
5-6	N.78°09'E.	8.67M.
6-7	N.78°09'E.	2.00M.
7-1	S.11°21'E.	1.84M.
Lot 68-G		
1-2	N.78°47'E.	4.06M.
2-3	S.11°21'E.	21.04M.
3-4	S.78°08'W.	8.67M.
4-5	N.08°27'W.	8.46M.
5-6	N.20°39'W.	15.37M.
6-1	N.78°47'E.	9.00M.

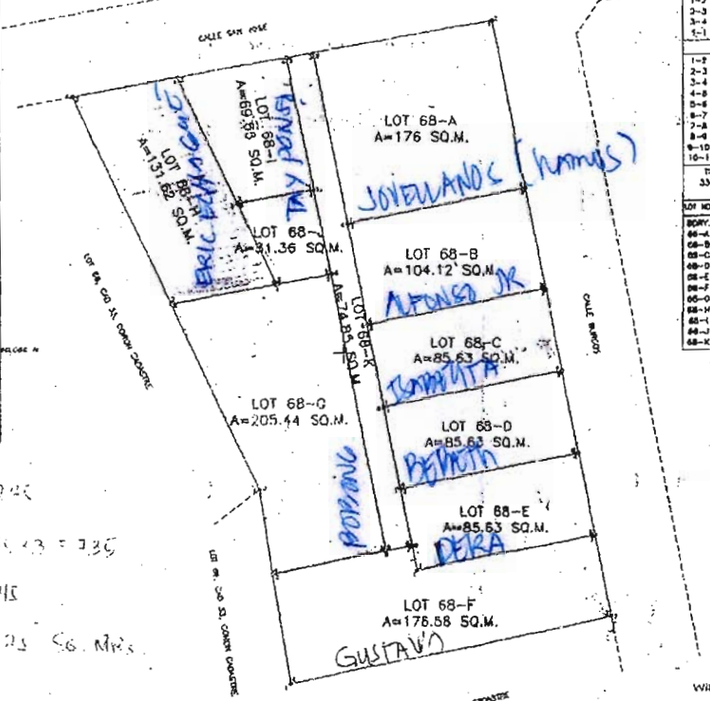

MANUEL - 245
NICOLASA
SANDALIO 1-245 x 3 = 735
SOLEDAD
JOSE - 245
1,225 SQ. MTS.

Lot 68-H		
1-2	S.78°47'E.	8.12M.
2-3	N.25°26'W.	17.00M.
3-4	N.78°47'E.	8.00M.
4-5	S.25°26'E.	10.36M.
5-1	S.28°28'E.	8.67M.
Lot 68-I		
1-2	S.78°47'W.	5.70M.
2-3	N.87°49'W.	10.30M.
3-4	N.78°47'E.	8.33M.
4-1	S.11°21'E.	10.86M.
Lot 68-J		
1-2	S.11°21'E.	0.81M.
2-3	S.78°47'W.	4.29M.
3-4	N.28°28'W.	0.84M.
4-1	N.78°47'E.	5.70M.
Lot 68-K		
1-2	N.11°21'W.	10.00M.
2-3	N.78°47'E.	2.00M.
3-4	S.11°21'E.	12.94M.
4-5	S.11°21'E.	7.80M.
5-6	S.11°21'E.	6.25M.
6-7	S.11°21'E.	6.25M.
7-8	S.11°21'E.	4.31M.
8-9	S.78°09'W.	2.00M.
9-10	N.11°21'W.	21.04M.
10-1	N.11°21'W.	8.41M.

Tie Line from Stn #1, CAD 33, CORON CADASTRE, CORON, PALAWAN to Corner "1":

LOT NO.	BEARINGS	DISTANCES
BDRY.	N.64°46'W.	144.60M.
68-A	N.27°46'W.	158.88M.
68-B	N.32°46'W.	158.66M.
68-C	N.58°31'W.	148.29M.
68-D	N.58°31'W.	148.06M.
68-E	N.58°08'W.	140.63M.
68-F	N.58°08'W.	140.03M.
68-G	N.55°13'W.	140.38M.
68-H	N.55°13'W.	140.78M.
68-I	N.57°38'W.	152.27M.
68-J	N.57°38'W.	152.27M.
68-K	N.57°38'W.	152.27M.

With my conformity

LAMENTE SANDOVAL & JOSEFA DACUNNON
Land Owner
(FOR SINGLE SUBDIVISION ONLY)

VERIFICATION FEE
Paid Under
O.R. No. _____
Date _____
_____ Cash _____ Check

NOTE:
All corners marked "P.S." are cyl. conc. mons. 15x30 cms.
All corners not marked are 15x15 cm. P.S. cyl. conc. mons. 15x30 cms.

ORIGINAL SURVEY _____ Surveyed _____ Approved _____
Certified True _____
Lot No. _____ Plan No. _____ Date _____
Decree No. _____ Date _____ LRC Rec. No. _____
OCT No. _____ Owner _____ Issued in _____
TCT No. _____ Owner _____ Issued in _____

SUBDIVISION
PLAN OF LAND
OF LOT 68, CAD 33, CORON CADASTRE
AS SURVEYED FOR
LAMENTE SANDOVAL & JOSEFA DACUNNON
SITUATED IN THE
BURBAN CODE : 045309
BARANGAY OF : POBLACION 2
MUN / CITY OF : CORON
PROVINCE OF : PALAWAN
ISLAND OF : BUSUANGA
Containing an area of 1226 Sq. M.
PPCS - TM/PRS 92 ZONE NO.:
BEARINGS : TRUE
SCALE : 1 : 200

APRIL 28, 2013
DOMINIC URIAN LOPEZ
Geodetic Engineer
PRC ID No. 10372 Date 04-01-10
PTR No. 8842098 Date 01-02-13
OR No. 7114-812-888

Republic of the Philippines
Department of Environment and Natural Resources
Lands Management Services
Region Office IV-B (MIMAROPA)
Manila

ROMAN C. LEGASPI
Chief, Regional Surveys Division

OSCAR C. DOMINGUEZ
Regional Technical Director of Lands

Date	Initials	Remarks	Signature

C.M. Name & Signature Date
Position verified by: _____
Plotted on P.M. _____ H. _____ T. by: _____
Field Notes checked by: _____
Traverse Computation checked by: _____
Astronomical Computation checked by: _____
Lot Data Computation checked by: _____
Plotted / Inked by: _____
Traced by: _____
Checked & Verified by: _____

ADDITIONAL INFORMATION AFTER DATE OF APPROVAL

Original Plan Cancelled by GEODETIC ENGINEER OFFICE PTR NO. 7114-812-888 OCLIF dated 8/21/2012 4:57:58 PM UP Docket Ink. Adj. 2010

Republic of the Philippines
REGIONAL TRIAL COURT OF PALAWAN
AND PUERTO PRINCESA CITY
Fourth Judicial Region
BRANCH 48
Puerto Princesa City

wünclv
1/3/18

IN RE: PETITION FOR THE REISSUANCEOF THE OWNER'S DUPLICATE COPY OF ORIGINAL CERTIFICATE OF TITLE (OCT) NO. 316

LAND CASE NO. 2427

ALFONSO PAMADO,
Represented by Isabelita P. San Jose

-vs-

THE REGISTER OF DEEDS OF PALAWAN
x- ---------x

ORDER

Petitioner through counsel moves for reconsideration of the decision dated July 11, 2017 denying the petition on the ground that petitioner Alfonso Pamado is not a real party in interest nor that he was authorized by the real party in interest to file the petition. In support of the motion, petitioner submitted an original copy of the *Extrajudicial Settlement of Estate of the late* Lamente Sandoval & Josefa Dacunon with Waiver of Rights showing the heirs who inherited the property covered by OCT 316 with an area of 1,226 square meters, subject of this petition. It appears that petitioner Alfonso Pamado or Alfonso Pamado, Sr., in the extrajudicial settlement, inherited a portion of the lot, *designated as Lot 68-I with an area of 69.66 square meters, and* Lot 68-J with an area of 31.36 square meters.

The document submitted by petitioner through counsel confirmed that the lot subject of the petition, covered by OCT No. 316, Palawan Registry of Deeds does not belong to petitioner alone. His interest thereon is limited to a small portion of the property. Despite that, he still failed to submit evidence to show that he was authorized by his co-heirs to file the petition. The court therefore does not see any ground to reconsider.

WHEREFORE, premises considered, the motion for reconsideration is denied.

SO ORDERED

Given this 14th day of December 2017, at Puerto Princesa City, Palawan.

LEAH E. DE LOS REYES-BAGUYO

Judge

Copy furnished:

1. Atty. Leogina Palanca 01/07/2018
2

LERB/rvm

Republic of the Philippines
REGIONAL TRIAL COURT OF PALAWAN
AND PUERTO PRINCESA CITY
Fourth Judicial Region
BRANCH 48
Puerto Princesa City

IN RE: PETITION FOR THE REISSUANCE OF THE OWNER'S DUPLICATE COPY OF ORIGINAL CERTIFICATE OF TITLE (OCT) NO. 316

LAND CASE NO. 2427

ALFONSO PAMADO,
Represented by Isabelita P. San Jose,
Petitioner,

-vs-

THE REGISTER OF DEEDS OF PALAWAN,
Respondent.

x- -x

DECISION

Submitted for decision is the verified petition signed by petitioner Alfonso Pamado (Alfonso) through counsel, praying that the Owner's Duplicate Copy of OCT No. 316 be reissued in the name of the registered owners Lamente Sandoval and Josefa Dacunnon.

Alfonso alleged that his petition concerns the owner's duplicate copy of Original Certificate of Title (OCT) No. 316 registered in the name of his predecessor-in-interest Lamente Sandoval. OCT No. 316 covers a parcel of land located along the national highway corner Calle Burgos in Baranagy Poblacion III, Coron, Palawan with an area of 1,226 square meters. Since 1974, he has been paying the real property taxes due the land. When the heirs of Lamente Sandoval were about to adjudicate the property, they cannot anymore find the owner's duplicate copy of the title. Diligent efforts were exerted to locate the title but to no avail. Hence, he executed an affidavit of loss and caused it to be annotated at the back of OCT No. 316. The title has not been mortgaged, encumbered or used as security in any obligation nor conveyed to a third person.

Finding the petition to be sufficient in form and substance, the Court issued an Order on August 15, 2014, setting the petition for hearing on November 12, 2014. Copies of said order were duly served to the Office of the Register of Deeds of Palawan and to petitioner at his given address; and posted in the bulletin boards at the Office of the Clerk of Court of RTC Palawan; Barangay Hall of Poblacion III, Coron; Provincial Capitol of Palawan and Puerto Princesa City Hall at least three (3) weeks before the scheduled date

of hearing. However, petitioner's counsel moved for resetting. When the case was called on September 2, 2015, petitioner and his counsel both failed to appear. Hence, the Court issued an order with a warning that a repetition of the same failure to appear will constrain the Court to dismiss the petition.

Finally, in the hearing of February 15, 2016, petitioner through counsel established the jurisdictional requirements by marking the exhibits, consisting of the petition[1]; the E-Copy of OCT No. 316[2]; the Tax Declaration[3]; the Tax Clearance[4]; the Land Verification Slip[5]; the Affidavit of Loss and Precautionary Notice;[6] the Special Power of Attorney;[7] the Court Order dated August 14, 2015[8]; the Court Order dated September 5, 2015;[9] the Motion to Appoint the Process Server of Coron-Busuanga MCTC for the posting of the court order and the petition[10]; the Certificate of Posting dated September 8, 2015[11]; and the Certificate of Posting dated September 23, 2015[12]. There being no written nor oral opposition to the petition, an order of general default was entered except as against the government.

Petitioner through counsel then presented evidence in an *ex-parte* hearing before Atty. Jyl C. Lauros-Padrones, Clerk of Court VI of RTC Palawan. First to testify was Alfonso F. Arroyo, Land Examiner I and duly authorized representative of the Register of Deeds of Palawan. He identified his Judicial Affidavit[13] and presented the original of OCT No. 316. He said that the electronic copy of the title attached to the record of the case was issued by their office. The Affidavit of Loss of petitioner is annotated on the title under Entry No. 2014001236, and that the title is not subject to any encumbrance.

Gustavo Torres (Gustavo) was the second witness for petitioner. He identified his Judicial Affidavit[14] and affirmed the statements therein. He knows Alfonso who they call Tay Pons as they were neighbors in Coron. Alfonso is already of advanced age and cannot come to court. He also knows Isabelita "Vits" Pamado, daughter of Tay Pons and his childhood friend. He is familiar with the copy of OCT No. 316, which, as early as 1970's was

---

[1] *Exhibit A & sub-marking*
[2] *Exhibit B & sub-marking*
[3] *Exhibit C & sub-marking*
[4] *Exhibit D*
[5] *Exhibit E*
[6] *Exhibit F*
[7] *Exhibit G*
[8] *Exhibit H & sub-marking*
[9] *Exhibit I*
[10] *Exhibit J & sub-marking*
[11] *Exhibit K*
[12] *Exhibit L*
[13] *Exhibit M & sub-marking*
[14] *Exhibit N & sub-marking*

4

already in the possession of Tay Pons. The land covered by the said title is registered in the name of Lamente Sandoval and Josefa Dacunnon. It was in the year 2013 when Vits discovered that the owner's copy of the title was already missing.

Petitioner presented Isabelita Pamado San Jose as last witness. She also executed a Judicial Affidavit[15] in connection with this petition. According to her, she is the attorney-in-fact of her father Alfonso who in his old age, desires to adjudicate the land covered by OCT No. 316 among his children, nephews and nieces, if not for the fact that the owner's duplicate copy is missing. With that, she is aware that her father Alfonso executed an Affidavit of Loss and Precautionary Notice and had it registered with the Office of the Palawan Registry of Deeds. His father was also the one paying the real property taxes due the land.[16]

Thereafter, petitioner through counsel formally offered the exhibits and rested.

In the instant case, the Court significantly noted that petitioner has not presented any evidence to show his relationship with the registered owners of the land covered by OCT No. 316, Spouses Lamente Sandoval and Josefa Dacunnon. While he claims to be the successor-in-interest of the said registered owners, no iota of evidence was presented to prove it. Without such proof, he failed to establish his interest on the land covered by OCT No. 316, and hence, his capacity to file the instant petition. The tax declaration issued under his name which he presented in the case is not an indicia of his interest on the land as the same did not show to be the Tax Declaration for the lot covered by OCT No. 316. The tax declaration covers only an area of 982 square meters.

It is evident that petitioner on his own, has no legal standing to file the petition for reissuance of the owner's duplicate copy of OCT No. 316, as he failed to allege and prove that he is the only or one of the heirs of Lamente Sandoval and Josefa Dacunnon, and that he was authorized by the other heirs, if any, to file the petition. Gustavo and Isabelita similarly failed to establish such relationship of Alfonso to the registered owners of the land. "Unless authorized by law or these Rules, every action must be prosecuted or defended in the name of the real party in interest."[17] Thus, the Court resolves that grant of the petition is not warranted.

WHEREFORE, premises considered, for lack of showing that petitioner Alfonso Pamado is a real-party in interest or that he was authorized by the real

---

[15] *Exhibit O & sub-marking*
[16] *OR No. 1726868 2/27/17*
[17] *Section 2, Rule 3, Rules of Court*

party-in interest to file the petition, the relief prayed for is hereby denied and the petition is hereby dismissed.

SO ORDERED.

At the Hall of Justice, Bgy. Sta. Monica, Puerto Princesa City, this July 11, 2017.

LEAH E. DE LOS REYES-BAGUYO
Judge

Copy furnished:

Atty. Leogina S. Palma - 08/07/2017
Alfonso Pamado rep. by
Isabelita P. San Jose - mailed

Republic of the Philippines
Department of Justice
PUBLIC ATTORNEY'S OFFICE
Coron, Palawan District Office
2/F National Agencies Bldg., Burgos cor. Real Sts.
Poblacion 2, Coron, Palawan 5316

8/16/19

16 August 2019

Engr. IKE PARANGUE
Municipal Engineer
Office of the Municipal Engineer
Coron, Palawan

Re: (1) Fencing Permit issued to Mr. Gustavo Torres, and
(2) Fencing Permit issued to Mr. Eric Echague

Dear Sir,

Respectfully referring to you the matter brought to our Office by Mr. Jeffrey Echague, Ms. Cristina B. Sianson, Ms. Elaine Custodio, and Ms. Marjorie Dadaya, all residents of Brgy. Poblacion 2, Coron, Palawan. Mr. Echague, and Ms. Sianson are concerned with Fencing Permit issued by Your Office to Mr. Gustavo T. Torres, copy hereto attached as **Annex "A"**. On the other hand, Ms. Custodio, and Ms. Dadaya, are concerned with Fencing Permit issued by Your Office to Mr. Eric Echague, copy herein attached as **Annex "B"**. Clients claim that per inquiry from Your Office, a (1) *Barangay Clearance*, and an (2) *Approved Title, with Lot Description*, among others, are required for the issuance of a Fencing Permit. And in compliance with the same Mr. Torres, and Mr. Echague allegedly submitted herein documents attached as **Annex "C"** for Barangay Clearance of Mr. Gustav o, **Annex "D"** for Barangay Clearance of Mr. Echague, and **Annex "E"**, for Approved Title, with Lot Description.

As clients asked undersigned to check the documents, perusal of the same reveals that the documents marked as **Annexes "C"** and **"D"**, do not contain any statement that the parcel of land subject of the Application is free, or at least cleared, from any complaint, dispute, or controversy. Also, the document marked as **Annex "E"** does not contain the name of the applicants. Moreover, while the Title is supported by an Extrajudicial Settlement of Estate of the registered owners, Lamente Sandoval and Josefa Dacunon, copy herein attached as **Annex "F"**, the same however, is not duly annotated in the Title, thus negating any valid claim of transfer of ownership, partition, or any transaction involving the land, in favor of any person. As can be gleaned from the title, the land covered by the same is co-owned in equal shares by all the Heirs of Spouses Lamente Sandoval and Josefa Dacunon.

Most respectfully, undersigned deems that the matter falls under the jurisdiction of Your Office. Hence, This Referral.

Our clients would like to seek clarification on the compliance of the documentary requirements for the Application of Fencing Permit of Mr. Torres and Mr. Echague. They claim to be the actual occupants of the land, hence, aggrieved by the issuance of the said permits.

Undersigned hopes that this matter will be settled amicably to prevent further recourse to other forum.

Thank you.

Respectfully yours,

Atty. Jocelyn G. Fumera
Officer-In-Charge
PAO-Coron, Palawan District Office

NB: Herein furnished is the Honorable Mayor as a matter of courtesy, and the Regional Public Attorney, for better monitoring of the services rendered by the District Office. Advice on the action taken will be highly appreciated. Thank you.

cc:

Hon. MARJO T. REYES
Municipal Mayor
Coron, Palawan

Dir. REVELYN V. RAMOS-DACPANO
Regional Public Attorney
PAO – MIMAROPA
4/F DOJ Agencies Bldg., LRA Cmpd.
NIA Rd. cor. East Ave., Diliman, Quezon City

LBC 1496-0702-0168
8-16-19

BOX 6 (TO BE ACCOMPLISHED BY THE DESIGN PROFESSIONAL)

FENCING:	LENGTH IN METERS	HEIGHT IN METERS
	___ INDIGENOUS MATERIALS	___ R.C STEEL MATTING
	___ R.C (Reinforced Concrete)	___ R.C BARBED WIRE
	___ R.C and CONC. HOLLOW BLOCKS	___ OTHERS (Specify) ___
	___ R.C and BRICKS	
	___ R.C and INTERLINK / CYCLONE WIRE	

BOX 7 (TO BE ACCOMPLISHED BY THE PROCESSING AND EVALUATION DIVISION)

PROGRESS FLOW					
	IN		OUT		
	DATE	TIME	DATE	TIME	PROCESSED BY
LINE AND GRADE (GEODETIC)					
CIVIL/ STRUCTURAL					
ELECTRICAL					
OTHERS (Specify)					

ASSESSED FEES				
LINE AND GRACE (GEODETIC)	Amount Due	O.R Number	Date Paid	Processed By
FENCING				
ELECTRICAL (if any)				
OTHERS (Specify)				
TOTAL				

BOX 8 (TO BE ACCOMPLISHED BY THE BUILDING OFFICIAL)

ACTION TAKEN:

PERMIT IS HEREBY ISSUED /GRANTED SUBJECT TO THE FOLLOWING CONDITIONS:

1. That under Article 1723 of the Civil Code of the Philippines, the engineer or architect who drew up the plans and specifications is liable for damages if within fifteen (15) years from the completion of the structure, it should due to defect in the plans or specifications or defects in the ground.The engineer or architect who supervisor the construction shall be solitary liable with the contractor should the edifice collapse due to defect in the construction or the use inferior materials.
2. That the proposed construction/erection/addition, etc. shall be in conformity with the provisions of the "National Building Code" (P.D.1096) and its Implementing Rules and Regulations.

   a. That prior to commencement of the proposed projects and construction an actual relocation survey shall be conducted by responsible
   Licensed Geodetic Engineer.
   b. That before commencing the excavation the person making or causing the excavation to be made shall verify in writing the owner of adjoining building not less than ten (10) days before such excavation is to be made and show how the adjoining building should be protected.
   c. That the owner o the fence shall engage of responsible licensed Architect or Civil Engineer to undertake the full time
   inspection and supervision of the construction work.
   d. That there shall be kept at the jobsite at all times a logbook wherein the actual progress of construction including test conducted weather condition and other pertinent data are to be recorded; same shall be made available for scrutiny and comments by the OBO representative during the conduct of his/her inspection pursuant to section 207 of the National Building Code

PERMIT ISSUED BY:

IKE D. PARANGUE
Municipal Engineer

NOTED BY:

AJERICO S. BARRACOSO
Municipal Mayor

Republic of the Philippines
Province of Palawan
Municipality of Coron
OFFICE OF THE MUNICIPAL ENGINEER

ANNEX "A"

FENCING PERMIT

APPLICATION NO. | FP NO. | BUILDING PERMIT NO.

BOX 1 (TO BE ACCOMPLISHED BY THE OWNER /APPLICANT)

OWNER/APPLICANT	LASTNAME	FIRST NAME	M.I	TIN
	TORRES	GUSTAVO	T.	

FOR CONSTRUCTION OWNED BY AN ENTERPRISE	FORM OF OWNERSHIP

ADDRESS: NO. STREET,	BARANGAY	CITY/MUNICIPALITY	ZIP CODE	TELEPHONE NO
	BGY. BORAC	CORON PAL.	5316	09206262588

LOCATION OF CONSTRUCTION: LOT NO 68-F BLK NO ____ TCT NO OCT 316 TAX DEC. NO 002-0011-C
CALLE BURGOS STREET, BARANGAY POBLACION 2 PROVINCE OF PALAWAN

SCOPE OF WORK
✓ NEW CONSTRUCTION
__ ERECTION
__ ADDITION
__ REPAIR
__ DEMOLITI
__ OTHERS (Specify)

BOX 2

DESIGN PROFESSIONAL, PLANS AND SPECIFICATIONS			
RAM CLIFFORD [illegible] Date ____			
ARCHITECT OR CIVIL ENGINEER (Signed and Sealed Over Printed Name)			
Address CORON, PALAWAN			
PRC.No 0148381	Validity 12/07/19		
PTR. No: 4574478	Date Issued 01/08/19		
Issued at	TIN		

BOX 3

FULL-TIME INSPECTOR AND SUPERVISOR OF CONSTRUCTION WORKS	
____ Date ____	
ARCHITECT OR CIVIL ENGINEER (Signed and Sealed Over Printed Name)	
Address	
PRC NO.	Validity
PTR. NO	Date Issued
Issued	TIN

BOX 4 (TO BE ACCOMPLISHED BY THE APPLICANT)

APPLICANT:	WITH MY CONSENT: LOT OWNER
GUSTAVO T. TORRES (Signature Over Printed Name) Date 6/20/2019	GUSTAVO T. TORRES (Signature Over Printed Name) Date 6/20/2019
Address	Address
C.T.C No. Date Issued Place Issued	C.T.C No. Date Issued Place Issued

BOX 5

REPUBLIC OF THE PHILIPPINES)
MUNICIPALITY OF ____) S.S

BEFORE ME, at the City/Municipality of ____ on 24 JUN 2019 personally Appeared the following:

GUSTAVO T. TORRES	31243898	6/18/19	CORON PALAWAN
APPLICANT	CTC No.	Date Issued	Place Issued

LICENSED ARCHITECT OR CIVIL ENGINEER CTC No Date Issued Place Issued
(Full time inspector and Supervisor of Fencing Works)

Whose signature appears hereinabove, known to me be the same persons who executed this standard prescribed form and acknowledged to me that the same is their free and voluntary act and deed.

WITHNESS MY HAND AND SEAL on the date and place above written.

Doc No. 321
Page No. [illegible]
Book No. [illegible]
Series No. 2019

ATTY. PERFECTO E. PE
NOTARY PUBLIC
UNTIL DECEMBER 31, 2019
NOTARIZING (Until December ____)
IBP NO. 102060/12-01-2017
PTR NO. [illegible]
TIN NO 137-250-508

CERTIFIED THRU COPY
IKE D. PARAGUAS
MUNICIPAL ENGINEER

"THE SIGN PROFESSIONAL)

LENGTH IN METERS	2.50 HEIGHT IN METERS
S MATERIALS	R.C STEEL MATTING
of Concrete)	R.C BARBED WIRE
HOLLOW BLOCKS	OTHERS (Specify)
KS	
ERLINK / CYCLONE WIRE	

OCESSING AND EVALUATION DIVISION)

PROGRESS FLOW				
	IN		OUT	
	DATE	TIME	DATE	TIME	PROCESSED BY

ASSESSED FEES

O GRACE (GEODETIC)	Amount Due	O.R Number	Date Paid	Processed By
ING				
ECTRICAL (If any)				
OTHERS (Specify)				
TOTAL				

BOX 8 (TO BE ACCOMPLISHED BY THE BUILDING OFFICIAL)

ACTION TAKEN:

PERMIT IS HEREBY ISSUED /GRANTED SUBJECT TO THE FOLLOWING CONDITIONS:

1. That under Article 1723 of the Civil Code of the Philippines, the engineer or architect who drew up the plans and specifications is liable for damages if within fifteen (15) years from the completion of the structure, it should due to defect in the plans or specifications or defects in the ground. The engineer or architect who supervisor the construction shall be solitary liable with the contractor should the edifice collapse due to defect in the construction or the use inferior materials.
2. That the proposed construction/erection/addition, etc, shall be in conformity with the provisions of the "National Building Code" (P.D.1096) and its Implementing Rules and Regulations.

   a. That prior to commencement of the proposed projects and construction an actual relocation survey shall be conducted by responsible
   Licensed Geodetic Engineer.
   b. That before commencing the excavation the person making or causing the excavation to be made shall verify in writing the owner of adjoining building not less than ten (10) days before such excavation is to be made and show how the adjoining building should be protected.
   c. That the owner o the fence shall engage of responsible licensed Architect or Civil Engineer to undertake the full time
   inspection and supervision of the construction work.
   d. That there shall be kept at the jobsite at all times a logbook wherein the actual progress of construction including tests conducted soil/lier condition and other pertinent data are to be recorded; same shall be made available for scrutiny and comments by the CEO representative during the conduct of his/her inspection pursuant to section 207 of the National Building Code

PERMIT ISSUED BY:

IKE D. PARANGUE
Municipal Engineer

NOTED BY:

AJERICO S. BARRACOSO
Municipal Mayor

ANNEX "B"

APPLICATION NO.

BOX 1 (TO BE ACCOMPLISHED BY THE OWNER/APPLICANT)

OWNER/APPLICANT: ECHAGUE ERIC O.

FOR CONSTRUCTION OWNED BY AN ENTERPRISE

ADDRESS: BGY. BORAC, CORON, PALAWAN 5316 09201242528

LOCATION OF PROPERTY: LOT NO. 68-D OCT. 316 CO2-0011-C

NATIONAL HIGHWAY COR. OTHE BORIAS BGY. POBLACION 2

NATURE OF WORK:
- ✓ NEW CONSTRUCTION
- ___ ERECTION
- ___ ADDITION

BOX 2

DESIGN PLAN AND SPECIFICATIONS

RAM CLIFFORD [illegible]
ARCHITECT OR CIVIL ENGINEER
(Signed and Sealed Over Printed Name)

Address: CORON, PALAWAN
PRC No. 0193981 Validity: 12/07/19
PTR No. 4574078 Date Issued: 01/08/19
Issued at: CORON

BOX 4 (TO BE ACCOMPLISHED BY THE APPLICANT)

CERTIFICATION

APPLICANT:

ERIC O. ECHAGUE
Date: 4/24/19

ERIC O. ECHAGUE
4/24/19

Address: BGY. BORAC, CORON, PALAWAN — BGY. BORAC, CORON, PALAWAN

CTC No. 31244224 Date Issued: 4/24/19 Place Issued: CORON PAL. — 31244224 4/24/19 CORON, PAL.

BOX 5

REPUBLIC OF THE PHILIPPINES
MUNICIPALITY OF Coron, Palawan 26 JUN 2019
BEFORE ME, at the City/Municipality above-mentioned
Appeared the following:

ERIC O. ECHAGUE 31244224 4/24/19 COR. PAL.

ATTY. [illegible]
NOTARY PUBLIC
UNTIL DECEMBER 31, 2019
ROLL NO. [illegible]
IBP NO. [illegible]
PTR NO. 4574055/01-03-2019
TIN NO. 137-[illegible]

Doc No. 239
Page No. 49
Book No. 48
Series No. 2019

Republic of the Philippines
Province of Palawan
Municipality of Coron
Barangay Poblacion 2

OFFICE OF THE PUNONG BARANGAY

CERTIFICATION

ANNEX " 6 "

TO WHOM IT MAY CONCERN:

THIS IS TO CERTIFY that **MARIA TAN TORRES** (deceased) ,represented by her heir, **GUSTAVO T. TORRES**, of legal age,married, one of the heirs of SPOUSES LAMENTE SANDOVAL (deceased) and JOSEFA DACUNNON (deceased) ,known to be the absolute owner of a certain area with Original Certificate of Title No. 316 and land area of one thousand two hundred twenty six (1,226 SQ.Mtrs.) square meters located at Barangay Poblacion 2, in this barangay.

CERTIFIES FURTHER, that MARIA TAN TORRES owned and assigned to her a portion of lot from a parcel of land mentioned above with **lot no. 68-F** measuring an area of **33 square meters**, based on a duly notarized Extra Judicial Settlement of the State of the late Spouses Lamente Sandoval and Josefa Dacunnon By the Heirs,and the Subdivision Plan of Land is hereto attached.

THIS CERTIFICATION Is being issued upon request of Mr. Gustavo T. Torres for his application for fencing permit and whatever entered legal purpose/s It may serve him best.

Given this 20th day of June 2019 at Bgy.Poblacion 2, Coron,Palawan.

OSCAR A. AMIT JR.
Punong Barangay

CERTIFIED THRU COPY
IKE D. PARANGUE
MUNICIPAL ENGINEER

ANNEX "6"

ORIGINAL CERTIFICATE OF TITLE

CERTIFICATE ORIGINAL DE TITULO

No.

OFFICE OF THE REGISTER OF DEEDS FOR THE PROVINCE OF

United States of America

CERTIFIED TRUE COPY

This is hereby certified that this is a true electronic copy of OCT 316 on file in Registry of Deeds of Province of Palawan which consists of 3 page(s). This is a system generated Certified True Copy and does not require a manually-affixed signature. Printed at Registry of Deeds of Province of Palawan Requested By: MARCELA SEGUNDO

"E-1"

MEMORANDUM of the Incumbrances Affecting the Property Described in this Certificate.

MEMORANDUM de los cargas y gravámenes a que está afecto el inmueble que se describe en este Certificado.

It is hereby certified that this is a true electronic copy of OCT 316 on file in Registry of Deeds of Province of Palawan [illegible]
[illegible] This is a system generated Certified True Copy and does not require [illegible]
Registry of Deeds of Province of Palawan [illegible]

LAND REGISTRATION AUTHORITY COV FORM
NOT AN OFFICIAL COPY IF NOT IN BLUE COLOR

Land Reg. Form No. 177

"E-2"

OCT No.: 365-316

Page No.:3

MEMORANDUM OF ENCUMBRANCES

Entry No.: 2014071236 Date: June 24, 2014 [illegible]

AFFIDAVIT OF LOST [illegible] EXECUTED BY ALFREDO PANALIGAN, ATTESTED THAT THE OWNER'S DUPLICATE OF TITLE WAS LOST, IN ACCORDANCE WITH [illegible] PAGE NO. 01; BOOK NO. LII; SERIES OF 2014, OF NOTARY PUBLIC OF [illegible] PALAWAN, ATTY. RONALD J. CARANDANG, DATED JUNE 9, 2014.

ATTY. MARICAR O. MISA-TAN
Register of Deeds II - Palawan Province

It is hereby certified that this is a true electronic copy of OCT 316 on file in Registry of Deeds of Province of Palawan which consists of 3 pages. This is a system generated Certified True Copy and does not require a manually-affixed signature. Printed at Registry of Deeds of Province of Palawan Requested By MARCELA SEGUNDO

Ref. No	2016007080	OR No.	1016479094
Date	11/14/2018	OR Date	Nov 14 2018
Time	01:38:43 PM	Amt	273.35

ANNEX "F"

EXTRAJUDICIAL SETTLEMENT OF ESTATE OF THE LATE SPOUSES LAMENTE SANDOVAL AND JOSEFA DACUNNON BY THE HEIRS

KNOW ALL MEN BY THESE PRESENTS:

This **Extra-judicial Settlement of Estate** made and executed by and among the only surviving heirs of the late spouses **LAMENTE SANDOVAL** and **JOSEFA DACUNNON** , namely: **MANUEL TAN, JOSE TAN, SIMPLICIO TAN SR., SOLEDAD TAN, NICOLASA TAN.**

1. **MANUEL TAN** married to **TRINIDAD SANDOVAL** – survived by their heirs namely:

   1. Concepcion Tan Ortega – deceased, resident of Coron, Palawan, Compulsory Heir – Ramon Ortega (grandson) of legal age ,married herein represented by Gustavo T. Torres by virtue of Special Power of attorney photocopy herein attached and form an integral part hereof

   2. Ines Tan Dormile – survived by her heir Erlinda Dormile herein represented by Gustavo Torres by virtue of Special Power of Attorney photocopy herein attached and form an integral part hereof.

   3. Pilar Tan Echague- survived by her four children namely:

      1. Mario T. Echague – of legal age ,widow ,residing in Coron, Palawan
      2. Trinidad E. Rafols – of legal age,widow, residing in Coron, Palawan
      3. Prescilla E. Concepcion-of legal age,widow, residing in Coron, Palawan
      4. Redempto T. Echague – of legal age, married, residing in Coron, Palawan
      5. Cleofe T. Echague- deceased, survived by wife and children namely: Angelica R. echague, Ma. Cleofe E. Nallas , Shahani E. Abis, Wyndle R. Echague, Mark R. Echague, Maria Paz E. Velasquez, hereto duly represented by their mother Angelina R. Echague by virtue of Special Power of Attorney, photocopy hereto attached and form an integral part hereof.

   4. Maria Tan Torres –deceased survived by children namely:
      1. Gustavo T. Torres - of legal age, married, resident of Coron, Palawan.
      2. Eleanor T. Reunir - of legal age, widow, resident of Coron, Palawan.
      3. Rowena T. Balon –of legal, age, married, resident of Coron, Palawan all are herein represented by their sibling Gustavo T. Torres by virtue of Special Power of Attorney , photocopy hereto attached and form an integral part hereof.

   5 Nemesina Tan Garraez- Deceased, survived by children Namely and duly represented by their sibling Antonio Garraez by virtue of Special Power of Attorney hereto attached and form an integral part hereof.

"F.1"

1. Corazon G. Reyes – of legal age, married, resident of Coron, Palawan.
2. Antonio Garraez – of legal age, married
3. Sonia G. Navalta – of legal age, married
4. Wilfredo Garreaz –of legal age. married

6 **Milagros Tan Rabang** – Deceased, survived by her two daughters Yolanda Rabang Dadaya and Milagros R. Zabala of legal ages represented by Yolanda Dadaya thru SPA herein attached.
7 **Bienvenido Tan**- deceased, without known issue.

2. **SIMPLICIO TAN SR.** married to **PAZ GREGORIO**- Both deceased with nine children namely:
Ramiro Tan, Jose Tan, Rosa Tan, Claudina Tan, Digna Tan Braganza Modesto Tan, Simplicio Tan Jr., Generoso Tan all deceased except Marina T. Gajardo.

That during the lifetime of Simplicio Tan Sr he executed an Affidavit of Affirmation and Confirmation of Sale of his share in favor of Nicolasa Tan, the document is duly acknowledged and notarized by Celestino V. Tomines, Notary Public hereto attached to form an integral part hereof.

SOLEDAD TAN married to **TEODORO PAMADO** –both deceased, survived by their children namely:

1. **Alfonso Pamado Sr**- of legal age, married, resident of Coron, Palawan.
2. **Josefa P. Dera** - deceased, survived by son Oscar P. Dera of legal age, married resident of Coron, Palawan represented by Isabelita P. San Jose by virtue of Special Power of Attorney, copy hereto attached to form an integral part hereof.

NICOLASA TAN SANDOVAL married to AGUSTIN SANDOVAL. Nicolasa died a widow had a child named Salud Tan Sandoval deceased, survived by her daughter Marietta Sandoval Ferrera –Flemlyn, represented by Isabelita P. San Jose by virtue of Special Power of Attorney, photocopy hereto attached to form an integral part hereof.

That during her lifetime she executed an instrument known as Affidavit of Acknowledgement of a Sale of her inheritance in favor of Rafaela Tan Echague duly acknowledged and notarized by Luis Bacosa, Notary Public. photocopy hereto attached to form an integral part hereof.

JOSE TAN married to **VICTORIANA TAN** - deceased , with children namely:

1. **Nicolas Tan** – deceased with surviving son Roberto Tan
2. **Clepatra Tan-Danganan** – deceased with children namely:
   1. Manuel Mendoza- of legal age ,married
   2. Romualdo Maligaya – of legal age ,married
3. **Josefina Tan Austria** – deceased survived by son
   1. Oscar Austria – of legal age , married
3. **Alejandra Tan Tabale** – deceased, with two children namely:

1. **Fedelina T. Dadaya** – deceased with seven children namely:

   1. Edgardo dadaya Sr. – of legal age,married
   2. Reynaldo Dadaya – of legal age,married
   3. Corazon D. Paculdas- deceased with child namely Robina P. macoy of legal age. married
   4. Mauro Dadaya- of legal age, married
   5. Gaudencio Dadaya- of legal age, married
   6. Elenita Dadaya – of legal age, single
   7. Jose Dadaya - of legal age, married

"F.2"

2. **Simfroniana Tabale Feria** – deceased with (6) six children namely herein duly represented by Edgardo Dadaya Sr. by virtue of Special power of Attorney hereto attached and form an integral part hereof.
   1. Armando Feria – of legal age, married
   2. Trinidad Feria-of legal age, married
   3. Genevieve F.Royo-of legal age, married
   4. Rosario F. Arzaga – of legal age , married
   5. Erlinda F. Velasco- of legal age, married

   6. Rafaela Tan Echague – deceased with children namely:
      1. Efren Echague – deceased survived by son Eric Echague
      2. Lita E. Escarda – of legal age,married
      3. Louella E. Tablazon – of legal age,married

- WITNESSETH -

1. **Whereas**, the above named compulsory heirs are the surviving grandchildren and great grandchildren of decedent spouses Lamente Tan and Josefa Dacunnon.

2. **Whereas**, spouses Lamente Tan and Josefa Dacunnon , both died intestate , witout Last Will or Testament , and without any outstanding debt in favor of any person or entity;

3. **Whereas,** at the time of death of the late spouses Lamente and Josefa, they are the absolute and registered owns of a parcel of land embraced in OCT No. 316 with an area of ONE THOUSAND TWO HUNDRED TWENTY SIX (1,226) SQUARE METERS located in the township of Coron , Palawan (now Barangay Poblacion 2, Coron, Palawan) and more particularly described as follows:

DESCRIPTION OF THE LAND
OCT NO. 316

A PARCEL OF LAND (Lot N). 68 of the Cadastral Survey of Coron) . With the improvements thereon, situated in the township of Coron. Bounded on the NE, by Calle Burgos; on the SE., by Lot N0. 69; On the SW by Lot N0S. 69 and 66;m and on the NW by Calle San Jose. Beginning at a point marked"1" on plan, being N., 64 deg. 46 W., 144.60 m. from B.L.L.M.1, thence n. 78' 20E., 24.80 to point "2", thence N.11' 22 W., 45.30 m. to point 3; thence S. 79 deg. 47 W., 31.92 m. to point "4" thence S.25 deg. 26E., 32.37 to point 5; thence S.8'27deg. E., 14.77E., to the point of beginning; Containing an area of ONE THOUSAND TWO HUNDRED TWENTY SIX (1,226) SQUARE METERS. All points referred to are indicated on the plan; bearings true; declination 1'20E., date of survey, January 25, 1913.

4. **Whereas.** on the Original Certificate of Title E-316 the owners' names appeared Lamente Sandoval and Josefa Dacunnon. In truth Lamente Sandoval has chinese name and is known in the township of Coron, Palawan to be Laurente Tan. On the other hand his Filipino wife is known as Josefa Daculnon. That the names appearing on the Original Certificate of Title E-316 as Lamente Sandoval

ERIC ECHAGUE LOUELLA E. TABLAZON

"F-3"

Laurente Tan and his wife Josefa Daculon are one and the same persons.

5. **Whereas,** to date there are no known debts or obligations due against the estate of the decedents and no intestate proceedings has yet been instituted against their estate.

6. **Whereas,** invoking the provisions of Section 1, rule 74 of the Rules of Court all parties hereto, being of legal age and with full capacity to contract, hereby by these presents agree to divide and partition the above described estate and accordingly adjudicate as they do hereby the same among and between themselves in the manner and proportion established by law :

a) To settle, divide, partition and adjudicate the above described real property, equally and equitably between themselves after mutual deliberations, government confirmation and acknowledgement of conveyances made by siblings and observance of present parameters of the estate in accordance with the government zoning of the national highways and local streets and alley ways hereto attached prestations of relocation survey of the property accordingly for each heir, photocopy hereto attached and form an integral part hereof and described as follows.

1/5 (245.2) Sq. M. TO Heirs of Manuel Tan
1/5 (245.2) Sq. M. TO Heirs of Simplicio Tan
1/5 (245.2) Sq. M. TO Heirs of Soledad Tan
1/5 (245.2) Sq. M. TO Heirs of Nicolasa Tan
1/5 (245.2) Sq. M. TO Heirs of Jose Tan

RELOCATION SURVEY as per attached:

TECHNICAL DESCRIPTIONS
LOT- 68 F- MANUEL TAN (MARIA TAN TORRES)

LINES	BEARINGS	DISTANCES
1-2	N.79'47*E.,	6.91 M.
2-3	S.12'10*E.,	4.72 M.
3-4	S. 79"47*W.,	7.07 M.
4-1	N.10'138W.,	4.72 M.

LOT 68-G-PILAR TAN ECHAGUE (MANUEL TAN SANDOVAL)

1-2	N. 10'13*W.,	4.54 M.
2-3	N.79'47*E.,	0.32 M.
3-4	N.79'47*E.,	7.07 M.
4-5	S.11'22*E.,	4.33 M
5-1	S.78'09*W.,	7.49 M.

LOT 68-H MILAGROS TAN RABANG (MANUEL TAN SANDOVAL)

1-2	S.10'13*E.,	4.72 M.
2-3	S.79'47*W.,	0.32 M>
3-4	S.79'47*W.,	6.67 M.
4-5	N.10'13*W.,	4.72 M.
5-6	N.79'47*E.,	0.26 M
6-1	N.79'47*E.,	6.73 M.

LOT 68-1 NEMESINA TAN GARRAEZ (MANUEL TAN SANDOVAL)

1-2	S.78'09*W.,	7.11 M.
2-3	N. 10'13*W.,	4.75 M.
3-4	N. 79'47*E.,	0.44 M.
4-5	S. 79'47**E.,	6.67 M.
5-1	S. 10'13*E.,	4.54 M.

Eric Echague Lovella R. Tablazini

"F-9"

LOT 68 –J BIENVENIDO TAN, CONCEPCION TAN ORTEGA, INES TAN DORMILE (MANUEL TAN SANDOVAL).

1-2	N. 79'47*E.,	1.75 M.
2-3	S. 10'13*E.,	4.72 M.
3-4	S. 79,47*W.,	0.44 M.
4-5	S. 10'13*e.,	4.75 M.
5-6	S.78; 09*W.,	10.21 M.
6-7	N.08'27*W.,	9.76 M.
7-1	N.79;47*E.,	8.59 M.

LOT 68-O NICOLASA TAN VDA. DE SANDOVAL (HEIRS OF RAFAELA TAN ECHAGUE)

1-2	S. 79'47* W.,	8.12 M.
2-3	N. 25'26*W.,	17.00 M.
3-4	N. 79'47*E.,	8.00 M.
4-5	S. 25'26*E.,	10.35 M.
5-1	S. 26'26*E.,	6.57 M.

LOT 68-N HEIRS OF JOSE TAN- 144.38 SQ.M.

LOT 68 –M HEIRS OF JOSE TAN

1-2	S. 11'22*E.,	4.75 M.
2-3	S. 79'47*W.,	9.93 M.
3-4	N. 25.26*W.,	4.92 M.
4-1	N.79'47*E.,	11.12 M.

LOT 68-L HEIRS OF JOSE TAN- 50.50 SQ.M.

LOT 68-K (50 SQ.M.) HEIRS OF NICOLASA TAN VDA. DE SANDOVAL

LOT 68-B HEIRS OF SOLEDAD TAN PAMADO (ALFONSO PAMADO JR.)

1-2	S. 11'22*E.,	7.60 M.
2-3	S. 79'47*W.,	13.70 M.
3-4	N. 11'22*W.,	7.60 M.
4-1	N. 79'47*E.,	13.70 M.

LOT 68-C NICOLASA TAN VDA. DE SANDOVAL (ISABELITA P. SAN JOSE)

1-2	S.79'47W.,	13.70 M.
2-3	N.11'22*W.,	6.25 M.
3-4	N. 79'47*E.,	13.79 M.
4-1	S. 11'22*E.,	6.25 M.

LOT 68-D NICOLASA TAN VDA. DE SANDOVAL (MA. NELLY P. DOSONG)

1-2	S. 11'22*E.,	6.25 M.
2-3	S. 79'47*W.,	13.70 M.
3-4	N. 11'22*W.,	6.25 M.
4-1	N.79'47*E.,	13.70M.

F. 5

LOT 68-A SOLEDAD TAN PAMADO

1-2	S.79'47*W.,	13.70 M.
2-3	N.11'22*W.,	12.85 M.
3-4	N.79'47*E.,	13.70 M.
4-1	S.11'22*E.,	12.85 M.

LOT 68-E NICOLASA TAN VDA. DE SANDOVAL (OSCAR P. DERA)

1-2	S. 79'47W.,	6.73 M.
2-3	N. 11'22*W.,	3.30 M.
3-4	N. 79'47*E.,	13.70 M.
4-5	S. 10'13*E.,	3.30 M.
5-1	S. 79'47*W.,	6.91 M.

LOT 68-P- RIGHT OF WAY

1-2	N.11'22*W.,	11.32 M.
2-3	N. 11'22*W.,	4.75M.
3-4	N.11'22*W.,	20.18 M.
4-5	N.79'47*E.,	2.01 M.
5-6	S. 11'22*E.M.	12.85 M.
6-7	S. 11'22*E.,	7.60M.
7-8	S.11'22* E.,	6.25 M.
8-9	S.11'22*E.,	6.25.M.
9-10	S.11'22*E.,	3.30 M.
10-11	S.79'47*W.,	0.25 M.
11-1	S. 79'47*W.,	1.75 M.

HEREBY RATIFYING AND CONFIRMING all that our respective Attorney's –in-Fact shall lawfully do or cause to be done by virtue of Special Power of Attorney and the rights and powers therein granted individually to their corresponding Attorneys- in Fact . Further, ratifying and confirming the hereto attached Affidavit of the late Simplicio Tan Sr., in favor of his now deceased sibling Nicolasa Tan and therefore, his specific share to the exclusion of our respective individual shares, Simplicio Tan Sr's share become part and parcel and total share of his sibling Nicolasa Tan and further confirming as well the sold portion of share by Nicolsa Tan in favor of Rafaela Tan Echague accordingly. We, the surviving heirs the late spouses Lamente Tan and Josefa Dacunnon collectively confirmed, ratified, honored and respected the same attached legal instruments hereto purposely to include Simplicio Tan Sr's share specifically in favor of Nicolasa Tan, photocopies of the affidavits hereto attached and form an integral part of this instrument.

IN WITNESS THEREOF, the parties have affixed their signatures of the acknowledgement page and initialed each page of this instrument hereto on 06 NOV 2018 in Coron, Palawan.

For the Heirs of MANUEL TAN

1. **CONCEPCION TAN ORTEGA** – deceased survived by grandson

RAMON ORTEGA
BY:

GUSTAVO T. TORRES
Representative
OSCA-39915

"F-7"

2. **HEIR OF SIMPLICIO TAN** - **MARINA T. GAJARDO**
OSCA-_ 4488

3. **HEIRS OF SOLEDAD TAN PAMADO**

ALFONSO T. PAMADO SR.
OSCA-0018

JOSEFA P. DERA - Deceased
OSCAR P. DERA
SON
BY:
ISABELITA P. SAN JOSE
Representative
OSCA-54795

4. **HEIRS OF JOSE TAN**- deceased

NICOLAS TAN - survived by **ROBERTO TAN**
OSCA- # 4851

CLEPATRA TAN DANGANAN- Deceased survived by:

MANUEL MENDOZA
ID. NO. OSCA 2242

ROMUALDO MALIGAYA
ID. NO. Postal 24389

JOSEFINA AUSTRIA deceased survived by son **OSCAR AUSTRIA**
OSCA-#3102

ALEJANDRA TAN TABALE- Deceased with two children

1. **FEDELINA TAN DADAYA** – Deceased with seven children

EDGARDO DADAYA SR. – **REYNALDO DADAYA** -
ID. NO.5309 - 6038A - 91137E4P ID. NO Postal 63415
10000

CORAZON D. PACULDAS- Dec. with daughter **ROBINA P. MACOY**
ID.NO. NN-342-012-341

BY Edgardo Dadaya

MAURO DADAYA - **GAUDENCIO DADAYA** - **ELENITA DADAYA**
ID.NO. ID. NO. SSS-03-880-2393-2 ID. NO. SSS-14-810-4591-5

JOSE DADAYA
JOSE DADAYA
ID. NO.

2. **HEIRS OF SIMFRONIANA TABALE FERIA** survived by children:

ARMANDO FERIA, TRINIDAD FERIA, GENEVIEVE F. LAGAN
VERONICA F. ROYO , ROSARIO F. ARZAGA -ERLINDA F. VELASCO

BY:
EDGARDO DADAYA SR.
Representative
ID.NO.

"F.8"

P9.

RAFAELA TAN ECHAGUE – Deceased with three children

EFREN ECHAGUE – Deceased represented by son **ERIC ECHAGUE**
ID. NO. P.R. NO. 004

LITA E. ESCARDA
ID. NO. OSCA 0991

LOUELLA E. TABLAZON
ID. NO. OSCA 9341

Signed In the presence of:

ACKNOWLEDGMENT

Republic of the Philippines)
Municipality of Coron) SS.
Province of Palawan)

Before me, a notary public in and for Coron, Palawan, Philippines personally appeared the Heirs and respective above-named representatives with their valid Identifications written above and under their names respectively and they presented to me the instrument **EXTRAJUDICIAL SETTLEMENT OF THE ESTATE OF THE LATE SPOUSES LAMENTE SANDOVAL AND JOSEFA DACUNNON BY THE HEIRS** who are known to me and who executed said instrument, and who acknowledged to me that the signatures on the instrument were voluntarily affixed by them for the purposes stated in the instrument, and declared to me that they have executed the instrument as their free and voluntary act and deed.

This instrument refers to the extrajudicial settlement of a parcel of land, located in Barangay 2, Coron, Palawan, consisting of nine (9) pages including this page where the acknowledgment is written.

IN WITNESS WHEREOF, We have hereunto set our names and affixed my notarial seal this 06 NOV 2018 in Coron, Palawan.

DOC. NO. 283
PAGE NO. 78
BOOK NO. 42
SERIES OF 20 18

ATTY. PERFECTO E. PE
NOTARY PUBLIC
UNTIL DECEMBER 31, 2019
ROLL NO. 25410
IBP NO. 102888/12-1-2017
PTR NO. 4953029/1-4-2018
TIN NO. 137-359-598
MCLE EXEMPT. NO. V-000195/UNTIL 4/14/2019.

APPLICATION NO.

BOX 1 (TO BE ACCOMPLISHED BY THE OWNER / APPLICANT)

OWNER/APPLICANT	LAST NAME: ECHAGUE	FIRST NAME: ERIC	O.
FOR CONSTRUCTION OWNED BY AN ENTERPRISE			
ADDRESS: NO. STREET,	BARANGAY: BGY. BORAC, CORON, PALAWAN		5316
LOCATION OF CONSTRUCTION: NATIONAL HIGHWAY COR.	LOT NO. 68-D	CCT. 316	CR2014-2(125)28 CR2-0011-C
SCOPE OF WORK: ✓ NEW CONSTRUCTION / ERECTION / ADDITION	REPAIR / RENOVATION		

BOX 2

RAM CLIFFORD [illegible] ARCHITECT OR CIVIL ENGINEER (Signed and Sealed Over Printed Name)	
Address: CORON, PALAWAN	
PRC No. 0193981 Validity: 12/07/19	
PTR No. 4574078 Date Issued: 01/08/19	
Issued at: CORON	

BOX 4 (TO BE ACCOMPLISHED BY THE APPLICANT)

APPLICANT:	
ERIC O. ECHAGUE (Signature Over Printed Name) Date: 6/24/19	ERIC O. ECHAGUE Date: 6/24/19
Address: BGY. BORAC, CORON, PALAWAN	BGY. BORAC, CORON, PALAWAN
CTC No. 31244224 Date Issued: 6/24/19 Place Issued: CORON, PAL.	CTC No. 31244224 Date Issued: 6/24/19 Place Issued: CORON, PAL.

CERTIFIED THRU COPY
IKE D. [illegible]
MUNICIPAL ENGINEER

BOX 5

REPUBLIC OF THE PHILIPPINES
MUNICIPALITY OF _____ S.S.

BEFORE ME, at the City/Municipality of Coron, Palawan 26 JUN 2019

Appeared the following:

ERIC O. ECHAGUE 31244224 6/24/19 COR. PAL.

[illegible] ARCHITECT OR CIVIL ENGINEER [illegible]

Whose signature appears [illegible]

Doc No. 339
Page No. 69
Book No. 42
Series No. 2019

ATTY. [illegible] DE [illegible]
NOTARY PUBLIC
UNTIL DECEMBER 31, 2020
ROLL NO. [illegible]
IBP NO. [illegible]
PTR NO. [illegible]
TIN NO. 137-[illegible]

TECHNICAL DESCRIPTION		
LINES	BEARINGS	DISTANCES
68		
1–2	N 03° 27' W	14.77M.
2–3	N 25° 26' W	32.37M.
3–4	N 79° 47' E	31.92M.
4–5	S 11° 22' E	43.30M.
5–1	S 78° 09' W	24.80M.
LOT 68–A		
1–2	S 79° 47' W	13.70M.
2–3	N 11° 22' W	12.85M.
3–4	N 79° 47' E	13.70M.
4–1	S 11° 22' E	12.85M.
LOT 68–B		
1–2	S 11° 22' E	7.60M.
2–3	S 79° 47' W	13.70M.
3–4	N 11° 22' W	7.60M.
4–1	N 79° 47' E	13.70M.
LOT 68–C		
1–2	S 79° 47' W	13.70M.
2–3	N 11° 22' W	6.25M.
3–4	N 79° 47' E	13.70M.
4–1	S 11° 22' E	6.25M.
LOT 68–D		
1–2	S 11° 22' E	6.25M.
2–3	S 79° 47' W	13.70M.
3–4	N 11° 22' W	6.25M.
4–1	N 79° 47' E	13.70M.
LOT 68–E		
1–2	S 79° 47' W	6.73M.
2–3	N 11° 22' W	3.30M.
3–4	N 79° 47' E	13.70M.
4–5	S 10° 13' E	5.30M.
5–1	S 79° 47' W	6.91M.
LOT 68–F		
1–2	N 79° 47' E	6.91M.
2–3	S 10° 13' E	4.27M.
3–4	S 79° 47' W	7.07M.
4–1	N 10° 13' W	4.72M.
LOT 68–G		
1–2	N 10° 13' W	4.54M.
2–3	N 79° 47' E	0.32M.
3–4	N 79° 47' E	7.07M.
4–5	S 11° 22' E	4.33M.
5–1	S 79° 09' W	7.49M.
LOT 68–H		
1–2	S 10° 13' E	4.72M.
2–3	S 79° 47' W	0.32M.
3–4	S 79° 47' W	6.67M.
4–5	N 10° 13' W	4.72M.
5–6	N 79° 47' E	0.26M.
6–1	N 79° 47' E	6.73M.
LOT 68–I		
1–2	S 79° 09' W	7.11M.
2–3	N 10° 13' W	4.75M.
3–4	N 79° 47' E	0.44M.
4–5	N 79° 47' E	6.67M.
5–1	S 10° 13' E	4.54M.

LOT 68–J		
1–2	N 79° 47' E	1.75M.
2–3	S 10° 13' E	4.72M.
3–4	S 79° 47' W	0.44M.
4–5	S 10° 13' E	4.75M.
5–6	S 78° 09' W	10.21M.
6–7	N 08° 27' W	9.76M.
7–1	N 79° 47' E	8.59M.
Lot 68–K		
1–2	S 79° 47' W	8.59M.
2–3	N 08° 27' W	5.01M.
3–4	N 25° 26' W	0.94M.
4–5	N 79° 47' E	8.56M.
5–1	S 11° 22' E	5.91M.
Lot 68–L		
1–2	S 11° 22' E	5.41M.
2–3	S 79° 47' W	8.56M.
3–4	N 25° 26' W	5.61M.
4–1	N 79° 47' E	9.93M.
Lot 68–M		
1–2	S 11° 22' E	4.75M.
2–3	S 79° 47' W	9.93M.
3–4	N 25° 26' W	4.82M.
4–1	N 79° 47' E	11.12M.
Lot 68–N		
1–2	S 79° 47' W	11.12M.
2–3	N 25° 26' W	3.00M.
3–4	N 79° 47' E	8.03M.
4–5	N 25° 26' W	17.00M.
5–6	N 79° 47' E	8.18M.
6–1	S 11° 22' E	20.13M.
Lot 68–O		
1–2	N 79° 47' E	9.03M.
2–3	S 25° 26' E	17.00M.
3–4	S 79° 47' W	9.03M.
4–1	N 25° 26' W	17.00M.
Lot 68–P		
1–2	N 11° 22' W	5.91M.
2–3	N 11° 22' W	5.41M.
3–4	N 11° 22' W	4.75M.
4–5	N 11° 22' W	20.13M.
5–6	N 79° 47' E	2.01M.
6–7	S 11° 22' E	12.85M.
7–8	S 11° 22' E	7.60M.
8–9	S 11° 22' E	6.25M.
9–10	S 11° 22' E	6.25M.
10–11	S 11° 22' E	3.30M.
11–12	S 79° 47' W	9.26M.
12–1	S 79° 47' W	1.75M.

Tie lines from BLLM #1, CAD 33, CORON CADASTRE, CORON, PALAWAN to Corner Marked "1":

LOT NO.	BEARINGS	DISTANCES
DOST.	N 64° 48' W	144.60M.
68–A	N 48° 55' W	140.86M.
68–B	N 45° 55' W	140.68M.
68–C	N 52° 24' W	139.14M.
68–D	N 52° 24' W	139.14M.
68–E	N 57° 11' W	137.09M.
68–F	N 57° 11' W	137.09M.
68–G	N 60° 14' W	131.20M.
68–H	N 57° 11' W	137.09M.
68–I	N 60° 14' W	131.20M.
68–J	N 59° 34' W	143.61M.
68–K	N 59° 34' W	143.61M.
68–L	N 55° 22' W	151.39M.
68–M	N 55° 09' W	154.79M.
68–N	N 55° 03' W	154.79M.
68–O	N 54° 20' W	152.51M.
68–P	N 53° 34' W	143.61M.

CERTIFIED THRU COPY

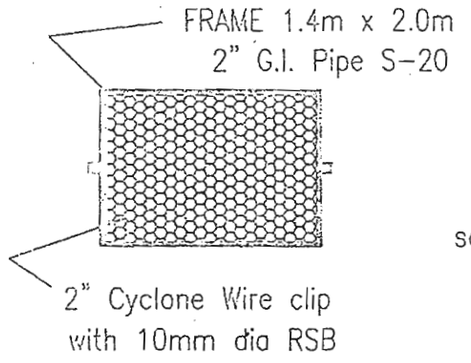

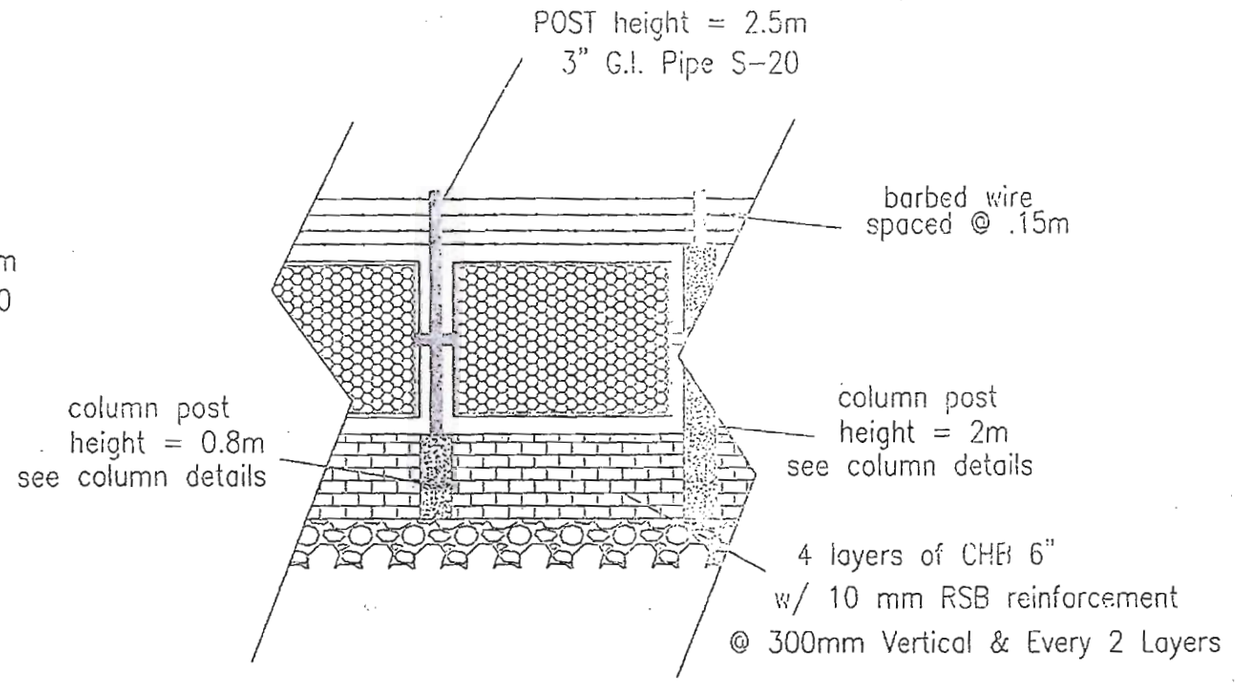

DETAILS OF FENCE

SCALE: NTS

CERTIFIED THRU COPY
IKE D. P[illegible]
MUNICIPAL ENGINEER

(Note : All G.I. Pipe Connections are all in Full Weld)

DESIGNED BY:	PROJECT TITLE:	PROJECT OWNER:	SHEET CONTENT:	SHEET NO.
RAM CLIFF[illegible] CIVIL ENGINEER	PROPOSED TEMPORARY FENCE	ERIC O. ECHAGUE	AS SHOWN	3
PRC No.: 0143801 VALIDITY: DEC. 7, 2019 PTR No.: 4571578 ISSUED: Jan 1, 2019	LOCATION: BGY. POB. 2 ,CORON, PALAWAN	LOCATION:BGY. BORAC ,CORON, PALAWAN		

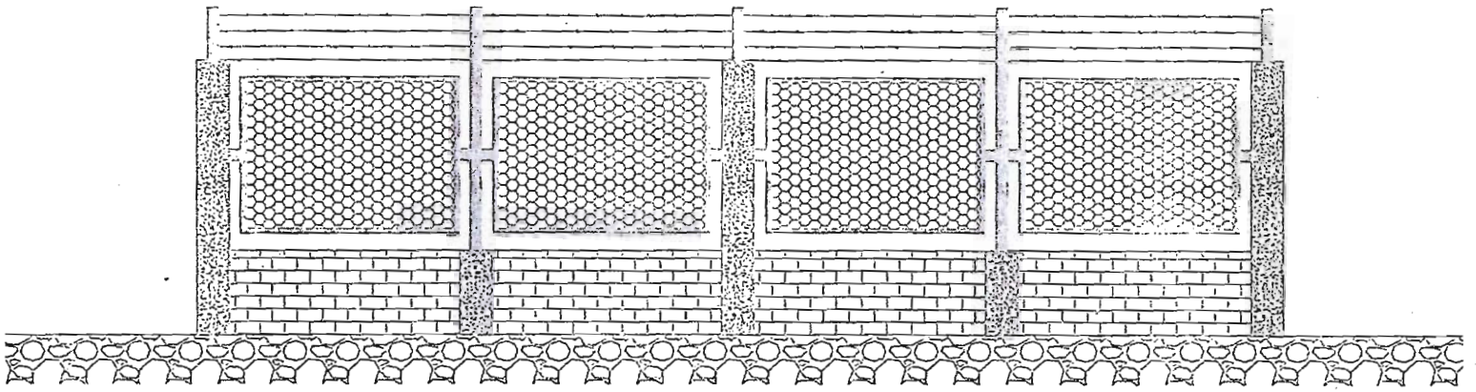

ELEVATION
SCALE: NTS

CERTIFIED THRU COPY
IKE D. PARANSUL
CIVIL ENGINEER

PREPARED BY:	PROJECT TITLE:	PROPOSED OWNER:	SHEET CONTENT:	SHEET No.:
RAM CLIFFE LIZANO SANTOS	PROPOSED TEMPORARY FENCE	ERIC O. ECHAGUE	AS SHOWN	1
PTR No. [illegible]	LOCATION: BGY. POBL 2, CORON, PALAWAN	LOCATION:BGY. BORAC ,CORON, PALAWAN		

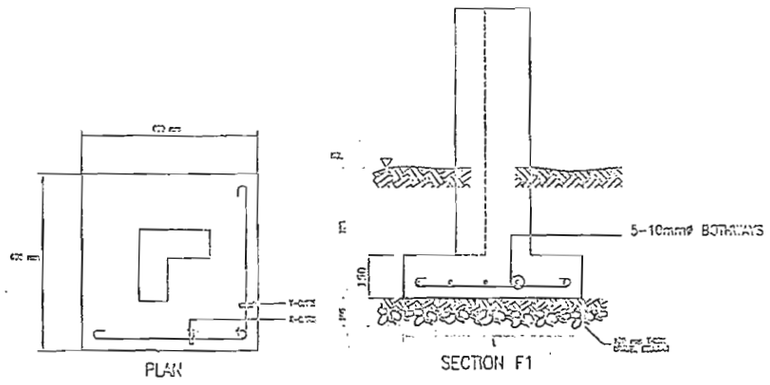

TYP. FOOTING DETAIL
SCALE : NTS

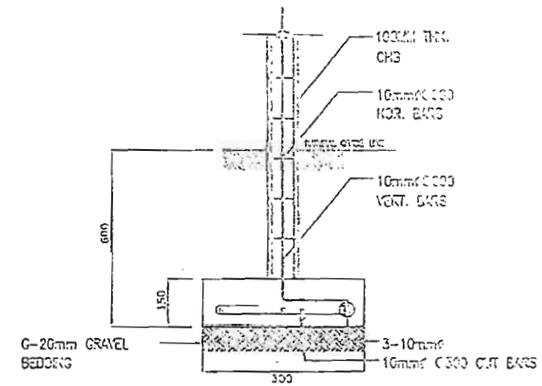

DETAIL OF WF
SCALE : NTS

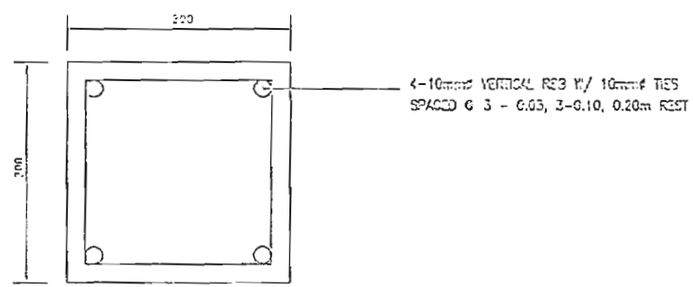

TYP. COLUMN DETAIL
SCALE : NTS

CERTIFIED THRU COPY
IKE D. PARANEU
MUNICIPAL ENGINEER

DESIGNED BY:	PROJECT TITLE:	PROJECT OWNER:	SHEET CONTENT:	SHEET No.:
RAM CLIFFORD [illegible] CIVIL ENGINEER	PROPOSED TEMPORARY FENCE	ERIC O. BONAGUE	AS SHOWN	2
PRC No.: 0143501 VALIDITY: DEC. 7, 2019 PTR No.: 4571578 ISSUED: Jan 1, 2019	LOCATION: BGY. POB. 2 ,CORON, PALAWAN	LOCATION:BGY. BORAC ,CORON, PALAWAN		

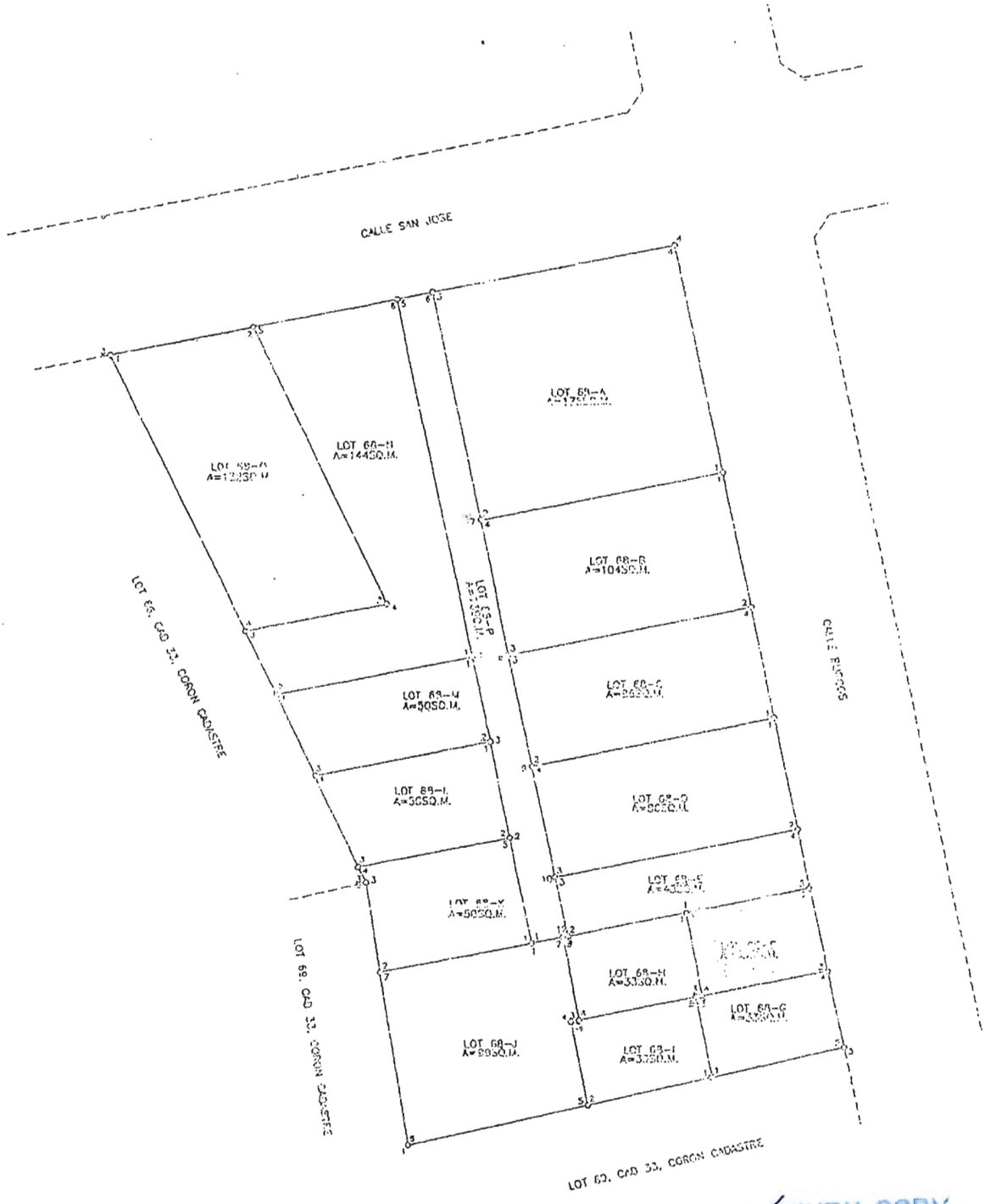

CERTIFIED THRU COPY
IKE D. ARANCHIL
MUNICIPAL ENGINEER

TECHNICAL DESCRIPTION		
LINES	BEARINGS	DISTANCES
LOT 65		
1-2	N 65° 23' W	14.72M.
2-3	N 23° 23' W	32.21M.
3-4	N 73° 47' E	21.62M.
4-5	S 11° 23' E	45.07M.
5-1	S 73° 47' W	26.62M.
LOT 65-A		
1-2	S 73° 47' W	13.70M.
2-3	N 11° 23' W	10.00M.
3-4	N 73° 47' E	13.70M.
4-1	S 11° 23' E	10.00M.
LOT 65-B		
1-2	S 11° 23' E	7.00M.
2-3	S 73° 47' W	13.70M.
3-4	N 11° 23' W	7.00M.
4-1	N 73° 47' E	13.70M.
LOT 65-C		
1-2	S 73° 47' W	13.70M.
2-3	N 11° 23' W	6.00M.
3-4	N 73° 47' E	13.70M.
4-1	S 11° 23' E	6.00M.
LOT 65-D		
1-2	S 11° 23' E	7.00M.
2-3	S 73° 47' W	13.70M.
3-4	N 11° 23' W	6.00M.
4-1	N 73° 47' E	13.70M.
LOT 65-E		
1-2	S 73° 47' W	6.35M.
2-3	N 11° 23' W	3.50M.
3-4	N 73° 47' E	12.70M.
4-5	S 10° 13' E	3.30M.
5-1	S 73° 47' W	6.55M.
LOT 65-F		
1-2	N 73° 47' E	6.51M.
2-3	S 12° 10' E	4.72M.
3-4	S 73° 47' W	7.67M.
4-1	N 10° 13' W	4.72M.
LOT 65-G		
1-2	N 10° 13' W	4.50M.
2-3	N 73° 47' E	0.22M.
3-4	N 73° 47' E	7.67M.
4-5	S 11° 23' E	4.33M.
5-1	S 73° 47' W	7.45M.
LOT 65-H		
1-2	S 10° 13' E	4.72M.
2-3	S 73° 47' W	0.22M.
3-4	S 73° 47' W	6.67M.
4-5	N 10° 13' W	4.72M.
5-6	N 73° 47' E	0.20M.
6-1	N 73° 47' E	6.72M.
LOT 65-I		
1-2	S 73° 47' W	7.11M.
2-3	N 10° 13' W	4.72M.
3-4	N 73° 47' E	0.14M.
4-5	N 73° 47' E	6.57M.
5-1	S 10° 13' E	4.54M.

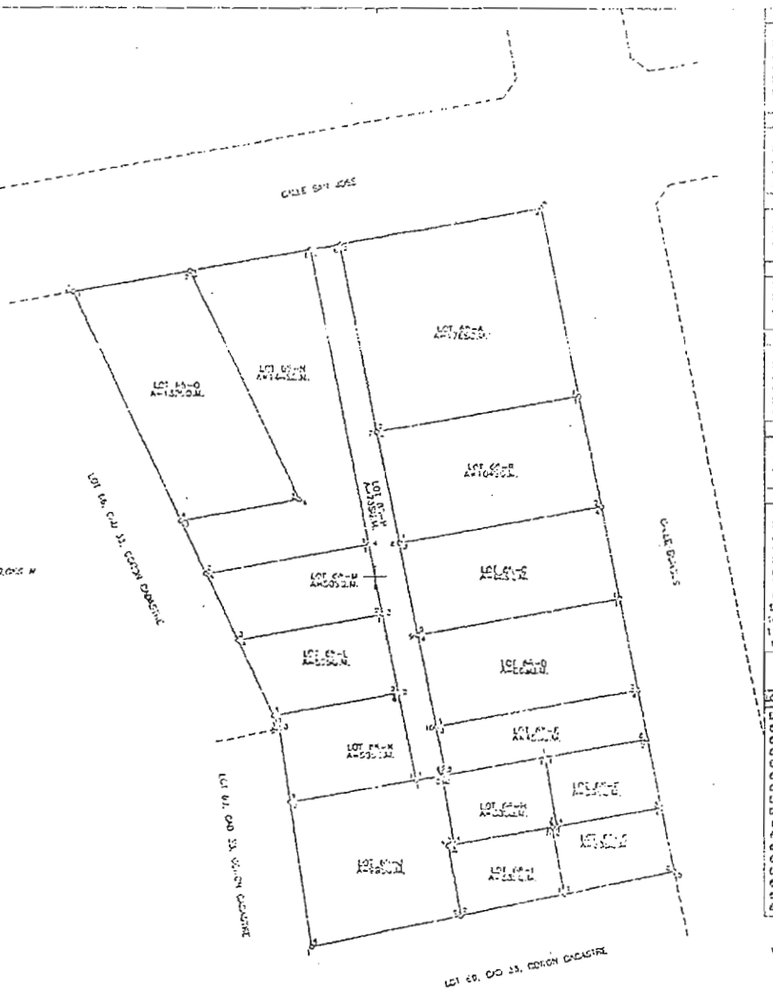

LOT 65-A		
1-2	N 73° 47' E	1.70M.
2-3	S 10° 13' E	4.72M.
3-4	S 73° 47' W	0.47M.
4-5	S 10° 13' E	4.72M.
5-6	S 73° 47' W	10.21M.
6-7	N 10° 13' W	9.72M.
7-1	N 73° 47' E	8.51M.
LOT 65-B		
1-2	N 73° 47' E	1.70M.
2-3	S 73° 47' W	0.47M.
3-4	N 73° 47' W	0.47M.
4-5	S 73° 47' E	0.47M.
5-1	S 11° 23' E	9.47M.
LOT 65-C		
1-2	S 11° 23' E	5.41M.
2-3	S 73° 47' W	6.55M.
3-4	N 11° 23' W	5.41M.
4-1	N 73° 47' E	6.55M.
LOT 65-D		
1-2	S 11° 23' E	4.72M.
2-3	S 73° 47' W	6.55M.
3-4	N 11° 23' W	4.72M.
4-1	N 73° 47' E	11.12M.
LOT 65-E		
1-2	S 73° 47' W	11.12M.
2-3	N 11° 23' W	3.52M.
3-4	N 73° 47' E	6.51M.
4-5	N 10° 20' W	17.03M.
5-6	N 73° 47' E	6.51M.
6-1	S 11° 23' E	20.18M.
LOT 65-F		
1-2	N 73° 47' E	6.51M.
2-3	S 12° 26' E	17.02M.
3-4	S 73° 47' W	7.67M.
4-1	N 10° 13' W	17.03M.
LOT 65-G		
1-2	N 11° 23' W	5.51M.
2-3	N 11° 23' W	3.47M.
3-4	N 11° 23' W	4.72M.
4-5	N 11° 23' W	20.18M.
5-6	N 73° 47' E	5.51M.
6-7	S 11° 23' E	12.47M.
7-8	S 11° 23' E	7.65M.
8-9	S 11° 23' E	6.25M.
9-10	S 11° 23' E	0.22M.
10-11	S 11° 23' E	3.30M.
11-12	S 73° 47' W	0.20M.
12-1	S 73° 47' W	1.25M.

The lines from LOT 65, CAD 33, CORON CADASTRE, CORON, MAPAON to Corner Marked "1"

LOT NO.	BEARINGS	DISTANCES
LOT 65	N 60° 40' W	144.65M.
65-A	N 40° 50' W	140.85M.
65-B	N 42° 53' W	140.22M.
65-C	N 62° 24' W	131.14M.
65-D	N 62° 24' W	131.14M.
65-E	N 57° 11' W	127.05M.
65-F	N 57° 11' W	127.05M.
65-G	N 57° 11' W	131.02M.
65-H	N 57° 11' W	131.02M.
65-I	N 62° 14' W	131.20M.
65-J	N 57° 24' W	143.61M.
65-K	N 57° 24' W	143.61M.
65-L	N 57° 27' W	131.33M.
65-M	N 60° 00' W	154.78M.
65-N	N 55° 00' W	150.75M.
65-O	N 54° 00' W	165.61M.
65-P	N 50° 34' W	145.61M.

With my conformity

HEIRS OF LAURENTE SANDOVAL
Land Owner
(FOR SIMPLE SUBDIVISION ONLY)

VERIFICATION FEE
Paid Under
O.R. No. _____
Date: _____
_____ Lot's _____ Corners

NOTE:
All corners marked "H.B." are cy. conc. mons. 15x40 cms.
All corners not otherwise described are Old P.S. cy. conc. mons. 15x40 cms.

SUBDIVISION
PLAN OF LAND
OF LOT 65, CAD 33, CORON CADASTRE
AS SURVEYED FOR
HEIRS OF LAURENTE SANDOVAL
SITUATED IN THE
BURGAN CODE : 04-33
BARANGAY OF : POBLACION
MUN./CITY OF : CORON
PROVINCE OF : PALAWAN
ISLAND OF : PALAWAN
PRCS - TMPRD 33 ZONE NO.
BEARINGS : TRUE
SCALE : 1:200

Registered Professional Engineer
Department of Environment and Natural Resources
Lands Management Services
Region Office, NR

Approved

Date Approved: _____

Approved Plan Registered, and notice issued to the Registrar of Deeds

Lot No.	Area	Remarks	Corresponding Plans Number

Date _____ Signature _____ Date

Position verified by: _____
Plotted on P.W. _____ N _____ E by: _____
Field Notes checked by: _____
Traverse Computation checked by: _____
Astronomical Computation checked by: _____
Lot Data Computation checked by: _____
Plotted / Mapped by: _____
Traced by: _____
Checked & Verified by: _____

ADDITIONAL INFORMATION AFTER DATE OF APPROVAL

CERTIFIED THRU COPY
REP. P. PARANGAN
ENGINEER

DETAILED ESTIMATE

Project : Temporary Fence
Subject : Detailed Estimate
Area : 132.00 sq.m.

Quantity	Unit	PARTICULARS	Unit Cost	Labor Cost	AMOUNT
I. Earthworks					
a. Clearing and Grubbing					
1.00	l.s.	Clearing and Grubbing Works	10,000.00		10,000.00
		Subtotal a		*3,000.00*	*10,000.00*
b. Excavation					
1.00	l.s.	Excavation Works	10,000.00		10,000.00
		Subtotal b		*3,000.00*	*10,000.00*
SUMMARY OF COST					
		Material and Labor Cost	*26,000.00*		
		Indirect Cost			
		HANDLING COST	1,000.00		
		OCM	1,300.00		
		VAT	3,120.00		
		TOTAL PROJECT COST I	**31,420.00**		
II. Fencing					
a. Concrete Post					
5.00	cu.m.	Gravel	1,500.00		7,500.00
2.50	cu.m.	Sand	1,500.00		3,750.00
50.00	bags	cement	285.00		14,250.00
70.00	pcs	10mm RSB	180.00		12,600.00
8.00	pcs	G.I. Pipe 3" dia	3,100.00		24,800.00
22.00	pcs	G.I. Pipe 2" dia	2,800.00		61,600.00
3.00	rolls	Cyclone Wire 2"	2,500.00		7,500.00
5.00	kgs	Tie Wire #16	100.00		500.00
5.00	pcs	Ord.Marine Plywood	950.00		4,750.00
400.00	pcs	CHB #6	17.00		6,800.00
		Subtotal a		*43,215.00*	*144,050.00*
SUMMARY OF COST					
		Material and Labor Cost	*187,265.00*		
		Indirect Cost			
		HANDLING COST	7,202.50		
		OCM	9,363.25		
		VAT	22,471.80		
		TOTAL PROJECT COST II	**226,302.55**		
GRAND TOTAL PROJECT COST					
(I+II) in figures			257,722.55		
GRAND TOTAL PROJECT COST (I+II) in words			Two Hundred Fifty Seven Thousand Seven Hundred Twenty Two and 55/100.		

Prepared by:

Ram Cliffe U. Zamuranos
CIVIL ENGINEER

CERTIFIED THRU COPY
[illegible]
CIVIL ENGINEER

SUMMARY OF DETAILED ESTIMATE

Project : Temporary Fence
Subject : Summary of Detailed Estimate
Area : 132.00 sq.m.

ITEM	SCOPE OF WORKS	DIRECT COST		INDIRECT COST	TOTAL
		Materials	Labor	(OCM,Handling Cost & VAT)	(Direct + Indirect Cost)
I	Earthworks	20,000.00	6,000.00	5,420.00	31,420.00
II	Fencing	144,050.00	43,215.00	39,037.55	226,302.55
				GRAND TOTAL:	257,722.55

Prepared by:

Ram Cliffe D. Zacarias
CIVIL ENGINEER

CERTIFIED THRU COPY
IKE D. PARONGIN
MUNICIPAL ENGINEER

Republic of the Philippines
Province of Palawan
Municipality of Coron
Barangay Poblacion 2

OFFICE OF THE PUNONG BARANGAY

CERTIFICATION

TO WHOM IT MAY CONCERN:

THIS IS TO CERTIFY that RAFAELA TAN ECHAGUE (deceased) ,represented by her heir ,ERIC O. ECHAGUE, of legal age, married , one of the heirs of SPOUSES LAMENTE SANDOVAL (deceased) and JOSEFA DACUNNON (deceased) , known to be the absolute owner of a certain area with Original Certificate of Title No. 316 and land area of one thousand two hundred twenty six (1,226 sq.mtrs.) square meters located at Barangay Poblacion 2, in this barangay.

CERTIFIES FURTHER , that RAFAELA TAN ECHAGUE owned and assigned to her a portion of lot from a parcel of land mentioned above with lot no, 68-O measuring an area of 132 square meters , based on a duly notarized Extra Judicial Settlement of the State of the late Spouses Lamente Sandoval and Josefa Dacunnon by the Heirs , and the Subdivision Plan of Land is hereto attached.

This CERTIFICATION is being issued upon request of Mr. Eric O. Echague for his application for fencing permit and whatever entered legal purpose/s it may serve him best.

Given This 20th day of June 2019 at Bgy. Poblacion 2. Coron,Palawan.

OSCAR AL AMIT JR.
Punong Barangay

CERTIFIED THRU COPY
IKE D. P[illegible]
MUNICIPAL [illegible]

III (a) BUILDING AND OTHER IMPROVEMENTS

1. OWNER'S DECLARATION

Description	Floor Area	Construction Materials 1st Storey	2nd Storey	3rd Storey	Roof	Market Value
					Total P	

1100 S00

2. ASSESSOR'S FINDINGS

Description	Floor Area	Construction Materials 1st Storey	2nd Storey	3rd Storey	Roof	Market Value
					Total P	

III (b) MACHINERY

1. OWNER'S DECLARATION

Description	Date of Operation	Original Cost	Depreciation	Market Value
				Total P

2. ASSESSOR'S FINDINGS

Description	Date of Operation	Original Cost	Depreciation	Market Value
				Total P

SWORN STATEMENT OF OWNER

Under the provisions of Republic Act No. 7160, I HEREBY CERTIFY that the current and fair market value (x) of the foregoing described property of which I am the owner/administrator, is to the best of my knowledge and belief, as follows:

Land ..... P _____
Improvement ..... P _____
TOTAL VALUE ..... P _____

(Signature)

TIN _____

Subscribed and sworn to before me this ____ day of _____, 20___, the person taking oath presenting Residence Certificate No. _____ issued on _____, 20___ at _____

(x) State in nearest multiple of 10 as P930 instead of P948, P1,040 instead of P1,004

Signature of Official Administering Oath

OFFICIAL TITLE

ASSESSMENT BY: (CITY/PROVINCIAL ASSESSOR
(BOARD OF ASSESSMENT APPEALS
(CENTRAL BOARD OF ASSESSMENT APPEALS

Kind of Property	Actual Use	Market Value	Assessment Level	Assessed Value
Land	Comml1	P 1,816,700.00	20 %	P 363,340.00
			%	P
			%	P
			%	P
	Total	P 1,816,700.00	%	P

TOTAL ASSESSED VALUE: THREE HUNDRED SIXTY THREE THOUSAND THREE HUNDRED FORTY PESOS P 363,340.00
(Amount in words)

APPROVED:

A/Provincial/City Assessor

By: MA. ARLENE B. VASQUEZ
LAND TAX
Supervisor

Date: Dec. 28, 2005

This declaration cancels TD-001 covering the same property.
Tax under this declaration begins with the year 2006 ... year
Entered in the Real Property Assessment Roll for 20 ____ by _____
Previous Owner: Same Previous assessed value: Land P 235,680.00 Improvement: P

REMARKS: Revised pursuant to Sec.219 of RA 7160 and Sec.23 of Provincial Ordinance no. 841,S-2005.

RPA FORM NO. 1
TAX DECLARATION NO. 002-0011-C

PROPERTY INDEX NO. 066-09-002-01-009

DECLARATION OF REAL PROPERTY

(FILED UNDER REPUBLIC ACT NO. 7160)

Owner ALFONSO PAMADO Address Borac, Coron, Palawan

Administrator _____ Address _____

DESCRIPTION AND OTHER PARTICULARS OF PROPERTY

Location of Property Nat'l Highway Cor. Calle Burgos, Bgy Pob, II Coron, Palawan
(Number & Street) (Barangay/District) (Municipality/City/Province)

Certificate of Title No. _____ Cadastral Lot No. 68,Cad.33 Assessor's Lot No. 009/01

Boundaries:

North: Bgy. Pob. IV South: ALN 011

East: ALN 010 West: ALN 008,011

(State streets, lots, or streams by which bounded, or names of owners of adjoining lands)

I (a) LAND (AGRICULTURAL/MINERAL)

OWNER'S DECLARATION			ASSESSOR'S FINDINGS				
Kind	Area	Value	Kind	Area	Class	Unit Values	Market Value

I (b) PLANTS & TREES

OWNER'S DECLARATION			ASSESSOR'S FINDINGS				
Kind	No./Area	Value		Kind	No./Area	Unit Value	Market Value
			Market Value _____ 100%				
			Adjustments				
			(a) Along or no rd frontage _____ %				
			(b) kms. to all weather rd _____ %				
			(c) kms. to market (pob) _____ %				
			Total Adjustments _____ %				
			Adjusted Market Value _____ %				
			Total				₱
			Total for land, plant and cress				₱
			Adjusted value for land, plants and trees				₱

II LAND (RESIDENTIAL, COMMERCIAL, INDUSTRIAL, SPECIAL)

OWNER'S DECLARATION			ASSESSOR'S FINDINGS				
Kind	Area	Value	Kind	Area	Unit Values	Adjustments	Market Value
			Comm'l	982	1,850.00	C=1	1,816,700.00
Total		₱	Total	982sqm			₱ 1,816,700.00

IMPORTANT: Issued for taxation purposes only and should not be considered as title to the property

CERTIFIED THRU COPY
IKE P. ARANCIL

Form No. 51-C
January 1992

(ORIGINAL)

Official Receipt
of the
Republic of the Philippines

№ 1201326 A

Date June 26, 2019

Agency | Fund

Payor Eric O. Echegaray

Nature of Collection	Account Code	Amount
Fencing Fee		P 267.20
TOTAL		P 267.20

Amount in Words Two Hundred Sixty Seven Pesos 20

☐ Cash	Drawee Bank	Number	Date
☐ Check			
☐ Money Order			

Received the amount stated above.

Collecting Officer

NOTE: Write the number and date of this receipt on the back of check or money order received.

Accounting Form No. 51-C
Revised January, 1992

(ORIGINAL)

Official Receipt
of the
Republic of the Philippines

№ 1201161 A

Date June 26, 2019

Agency | Fund

Payor Eric O. Echegaray

Nature of Collection	Account Code	Amount
Fencing Fee		P 64.50
TOTAL		P 64.50

Amount in Words Sixty Four Pesos 50

☑ Cash	Drawee Bank	Number	Date
☐ Check			
☐ Money Order			

Received the amount stated above.

Collecting Officer

NOTE: Write the number and date of this receipt on the back of check or money order received.

BIR FORM 0016 (DECEMBER 2014)

COMMUNITY TAX CERTIFICATE — INDIVIDUAL — CCI2017

YEAR 20 19 | PLACE OF ISSUE (City/Municipality) | DATE ISSUED 06-24-19

TAXPAYER'S COPY

NAME (LAST, FIRST, MIDDLE) Echegaray Eric

ADDRESS Brgy Bonne Camp Pol.

SEX: ☐ MALE ☐ FEMALE

CITIZENSHIP Fil. | ICR NO. (If an Alien) | PLACE OF BIRTH Cam. Pol. | HEIGHT

CIVIL STATUS: ☐ 1 Single ☐ 2 Married ☐ 3 Widow/Widower/Legally Separated ☐ 4 Divorced

DATE OF BIRTH 08-18-65 | WEIGHT

PROFESSION / OCCUPATION / BUSINESS

	TAXABLE AMOUNT	COMMUNITY TAX DUE
A. BASIC COMMUNITY TAX (₱5.00) Voluntary or Exempted (₱ 1.00)		₱ 5
B. ADDITIONAL COMMUNITY TAX (tax not to exceed ₱5,000.00)		
1. GROSS RECEIPTS OR EARNINGS DERIVED FROM BUSINESS DURING THE PRECEDING YEAR (₱1.00 for every ₱ 1,000.00)	₱	
2. SALARIES OR GROSS RECEIPT OR EARNINGS DERIVED FROM EXERCISE OF PROFESSION OR INPURSUIT OF ANY OCCUPATION (₱1.00 for every ₱ 1,000)		65
3. INCOME FROM REAL PROPERTY (₱1.00 for every ₱ 1,000)		
	TOTAL	₱ 70
	INTEREST	8.40
	TOTAL AMOUNT PAID	₱ 78.40

Right Thumb Print | TAXPAYER'S SIGNATURE

MUNICIPAL / CITY TREASURER

In words: seventy Eight 40/100

CERTIFIED THRU COPY
IKE D. PARANGUI
MUNICIPAL ENGINEER

DOP: 04.20.2017

Y TH SIGN PROFESSIONAL)

___ LENGTH IN METERS		2.50	HEIGHT IN METE
S MATERIALS		___ R.C STEEL MATTING	
d Concrete)		___ R.C BARBED WIRE	
HOLLOW BLOCKS		___ OTHERS (Specify)	
KS			
ERUNK / CYCLONE WIRE			

OCESSING AND EVALUATION DIVISION)

PROGRESS FLOW					
	IN		OUT		
	DATE	TIME	DATE	TIME	PROCESSED BY

ASSESSMENTS

D CHARGE (GEOLOGIC)	Amount Due	O.R Number	Date Paid	Processed By
ING				
ECTRICAL (If any)				
OTHERS (Specify)				
TOTAL				

BOX 8 (TO BE ACCOMPLISHED BY THE BUILDING OFFICIAL)

ACTION TAKEN:

PERMIT IS HEREBY ISSUED /GRANTED SUBJECT TO THE FOLLOWING CONDITIONS:

1. That under Article 1723 of the Civil Code of the Fillipinnes, the engineer or architect who draw up the plans and specifications is liable for damages if within fifteen (15) years from the completion of the structure, it should due to defect in the plans or specifications or defects in the ground.The engineer or architect who supervise the construction shall be solitary liable with the contractor should the edifice collapse due to defect in the construction or the use inferior materials.
2. That the proposed construction/erection/addition, etc. shall be in conformity with the provisions of the "National Building Code" (P.D.1096) and its Implementing Rules and Regulations.

   a. That prior to commencement of the proposed projects and construction an actual location survey shall be conducted by responsible
   licensed Geodetic Engineer.
   b. That before commencing the excavation the person making or causing the excavation to be made shall verify in writing the owner of adjoining building not less than ten (10) days before such excavation is to be made and show how the adjoining building should be protected.
   c. That the owner o the fence shall engage of responsible licensed Architect or Civil Engineer to undertake the full time
   Inspection and supervision of the construction work.
   d. That there shall be kept at the jobsite at all times a logbook wherein the actual progress of construction including test conducted weather condition and other pertinent data are to be recorded, same shall be made available for scrutiny and comments by the DOH representative during the conduct of his/her inspection pursuant to section 207 of the National Building Code

PERMIT ISSUED BY:

IKE D. DARANGUE
Municipal Engineer

NOTED BY:

ALBERICO V. BARRACOSO
Municipal Mayor

ORIGINAL CERTIFICATE OF TITLE

CERTIFICADO ORIGINAL DE TITULO

No.

OFFICE OF THE REGISTER OF DEEDS FOR THE PROVINCE OF

Entered pursuant to the following Decree:

"Decree No.

United States of America

Philippine Islands

Court of First Instance, Province of

IKE Q. BARANGUI
MUNICIPAL E

This is an unofficial photocopy of OCT 316 on file - Registry of Deeds of Province of Palawan consisting of 3 pages. This is a system generated Certified True Copy and does not require a manual or official signature. Registry of Deeds of Province of Palawan (Puerto P.), MARICELA SEGUNDO

ORIGINAL CERTIFICATE OF TITLE

No.

OFFICE OF THE REGISTER OF DEEDS FOR THE PROVINCE OF

United States of America

Philippine Islands

Court of First Instance, Province of

This is to certify that the foregoing is a true copy of OCT 316 in the Registry of Deeds of Province of Palawan consisting of 2 pages. This is a duly generated Certified True Copy and does not require a manual or digital signature. Registrar of Registry of Deeds of Province of Palawan Petronila P. MARCELA SEGUNDO

MEMORANDUM of the Incumbrances Affecting the Property Described in this Certificate.

MEMORANDUM de los cargas y gravámenes a que está afecto el inmueble que se describe en este Certificado.

I hereby certified that this is a true and exact copy of OCT 316 on file in Registry of Deeds of Province of Palawan, consisting of 3 pages. This is a system generated Certified True Copy, and does not require a manual/wet signature. Issued at Registry of Deeds of Province of Palawan. Requested By: MARCELA SEGUNDO

CERTIFIED THRU COPY
IKE D. PARANGU
MUNICIPAL ENGINEER

LAND REGISTRATION AUTHORITY CCV FORM
UNOFFICIAL COPY IF NOT IN BLUE COLOR

Judicial Form No. 117

OCT No.: 065-316

Page No.:3

MEMORANDUM OF ENCUMBRANCES

Entry No.: 2014071236 Date: June 14, 2014 11:54:53AM

AFFIDAVIT OF LOST [illegible] EXECUTED BY ALFONSO PASAGI, ATTESTING THAT THE OWNER'S DUPLICATE OF TITLE WAS LOST, IN ACCORDANCE WITH DOC. NO. 147, PAGE NO. 01, BOOK NO. LIII, SERIES OF 2014, OF NOTARY PUBLIC OF CORON, PALAWAN, ATTY. RONALD J. CARANDANG, DATED JUNE 9, 2014.

ATTY. MARICAR O. MISA-TAN
Register of Deeds II - Palawan Province

It is hereby certified that this is a true electronic copy of OCT 316 on file in Registry of Deeds of Province of Palawan which consists of 3 page(s). This is a system generated Certified True Copy and does not require a manually-affixed signature. Printed at Registry of Deeds of Province of Palawan Requested By MARCELA SEGUNDO

Ref. No 2018037090 OR No. 1018479094
Date 11/14/2018 OR Date : Nov 14 2018
Time 01:38:43 PM Amt 273.35

CERTIFIED THRU COPY
IKE D. PARANGIH
MUNICIPAL ENGINEER

MARJORIE DADAYA—ACTUAL OCCUPANT

AUGUST 7, 2019

JULY 29, 2019

ENGINEER IKE PARANGUE
MUNICIPAL ENGINEER
MUICIPALITY OF CORON,
CORON, PALAWAN

Sir,

Magandang araw!

Kami ay sumulat sa inyong tanggapan upang ipaalam ang naging kasagutan at usapan ng abogadong aming nahingan ng tulong tungkol sa hinihingi mong sulat na magpaparevoke ng inyong pirma o sa naisyu niyong **FENCING PERMIT** kay **G. Gustavo Torres at G. Eric Echague** at ayon sa kanya walang ibang dapat magrevoke ng inyong naisyung permit o pirma kundi kayo lamang na siyang nag-isyu at pumirma, kaya hindi kami nabigyan ng hinihingi niyong sulat mula sa kanya.

Naitanung din namin sa kanya ang tungkol sa **EXTRAJUDICIAL** at kanyang ipinaliwanag na ang **EXTRAJUDICIAL** ay valid lamang duon sa mga TAGAPAGMANA (HEIRS) na pumirma at nagkasundo tungkol sa paghahati ng lupa at **JUDICIAL PARTITION** kung hindi nagkasundo.

At sa aming pagtatanung sa kanya hindi kailangan ng isang abogado upang malaman kung sino ang nagmamay-ari ng isang lote o lupa, upang maisyuhan ng Fencing Permit iyon ay batay sa mga documentong isinumete o ipinakita; at kanya ring nabanggit na dapat ay nagkaroon ng Ocular Inspection bago maisyu ang Fencing Permit.

Isa lamang kaming mga ordinaryo at simpleng mamamayan na walang masyadong kaalaman tungkol sa usapin ng pagkuha ng Fencing Permit o Building Permit nais naming malaman kung nagkaroon po ba ng Ocular Inspection bago po kayo nagrelease ng Fencing Permit.

Kung nagkaroon ng Ocular Inspection nais naming humingi ng kopya at kung walang nagconduct ng Ocular Inspection nais naming malaman ang dahilan;

Gusto naming malaman ang inyong kasagutan bago ang pagbabakod na mangyayari ngayong darating na August 5, 2019.

MARJORIE DADAYA
ACTUAL OCCUPANT

ELLEN CUSTODIO PAULO
ACTUAL OCCUPANT

REDEMPTO ECHAGUE/JEFFREY ECHAGUE
ACTUAL OCCUPANT/ATTY. IN FACT

Received by:

cc:

OFFICE OF THE MAYOR
CORON, PALAWAN

OFFICE OF THE COMMISSION ON HUMAN RIGHTS
UNIT 7, CNMS BUILDING,
TINIGUIBAN, PUERTO PRINCESA CITY

OFFICE OF THE OMBUDSMAN
AGHAM ROAD DILIMAN QUEZON CITY

August 01, 2019

HON. OSCAR AMIT
BGY. CAPTAIN
BGY. 2, CORON, PALAWAN

Sir,

Magandang araw!

Bilang isang actual occupant at siyang naninirahan sa loteng nais bakurin ni **G. ERIC ECHAGUE** ay nais kong malaman kung napag-aralan, napagdesisyonan at mayroon ka ng konkretong aksyong gagawin batay sa naunang sulat ko sa iyong Tanggapan, kalakip ang mga documentong nagpapatunay na may problema pa pagdating sa ownership ng loteng nais nila bakurin.

Nais kong malaman mo na may kasama akong naninirahan na isang sanggol at isang may edad na mahigit sa limampu't isa, na kung sakaling bakurin ang harapang bahagi ay manganganib ang buhay ng bawat miyembro ng pamilya, dahil sa wala ng madadaanan kung magkaroon ng problemang pangkalusugan at sakunang hindi inaasahan tulad ng sunog.

Nais ko ring ipaalam sa iyo na ang bawat tao ay may karapatang mabuhay ng maayos at maging ligtas sa anumang panganib, at ayon sa aming napagtanungang abogado na ang ***pagbabakod ay isang prebelihiyo na hindi dapat gamitin upang makapanira ng buhay at mabalewala ang karapatan bilang isang tao o mamamayan.***

Nais ko ding malaman mo na Tagalog Version ang aking sulat at alam kong madali mo itong maintindihan.

Maraming Salamat.

MARJORIE DADAYA
ACTUAL OCCUPANT

cc:

OFFICE OF THE MAYOR
CORON, PALAWAN

OFFICE OF THE DILG (DEPARTMENT OF INTERIOR AND LOCAL GOVERNMENT)
CORON, PALAWAN

OFFICE OF THE COMMISSION ON HUMAN RIGHTS
UNIT 7, CNMS BUILDING,
TIKIGUIBAN, PUERTO PRINCESA CITY

OFFICE OF THE OMBUDSMAN
AGHAM ROAD DILIMAN QUEZON CITY

August 05, 2019

HON. OSCAR AMIT
PUNONG BARANGAY
BARANGAY 2, CORON, PALAWAN

Sir,

Magandang araw!

Bilang isang actual occupant at siyang naninirahan sa loteng nais bakurin ni **G. ERIC ECHAGUE** ay nais kong malaman kung napag-aralan, napagdesisyonan at mayroon ka ng konkretong aksyong gagawin batay sa naunang sulat ko sa iyong Tanggapan, kalakip ang mga documentong nagpapatunay na may problema pa pagdating sa ownership ng loteng nais nila bakurin.

Nais kong malaman mo na may kasama akong naninirahan na isang sanggol at isang may edad na mahigit sa limampu't isa, na kung sakaling bakurin ang harapang bahagi ay manganganib ang buhay ng bawat miyembro ng pamilya, dahil sa wala ng madadaanan kung magkaroon ng problemang pangkalusugan at sakunang hindi inaasahan tulad ng sunog.

Nais ko ring ipaalam sa iyo na ang bawat tao ay may karapatang mabuhay ng maayos at maging ligtas sa anumang panganib, at ayon sa aming napagtanungang abogado na ang ***pagbabakod ay isang prebelihiyo na hindi dapat gamitin upang makapanira ng buhay at mabalewala ang karapatan bilang isang tao o mamamayan.***

Nais kong malaman ang iyong desisyon bago gawin ang pagbabakod ngayong August 5, 2019 araw ng Lunes.

Maraming Salamat.

MARJORIE DADAYA
ACTUAL OCCUPANT

cc:

OFFICE OF THE MAYOR
CORON, PALAWAN

OFFICE OF THE DILG (DEPARTMENT OF INTERIOR AND LOCAL GOVERNMENT)
CORON, PALAWAN

OFFICE OF THE COMMISSION ON HUMAN RIGHTS
UNIT 7, CNMS BUILDING,
TINIGUIBAN, PUERTO PRINCESA CITY

OFFICE OF THE OMBUDSMAN
AGUAM ROAD DILIMAN QUEZON CITY

JULY 25, 2019

ENP/ENGR. MICHAEL ADRIAN F. FABABEIR, MPA, MURP
OFFICE OF THE MUNICIPAL PLANNING & DEV'T COORDINATOR
MUNICIPALITY OF CORON
CORON, PALAWAN

Sir;

Magandang araw!

Ako si **MARJORIE DADAYA** actual occupant at residente sa isa sa bahaging lote na makikita sa Bgy. 2, Coron, Palawan, na babakurin ni **G. ERIC ECHAGUE** sa **IKA-5 NG AGOSTO** araw ng **LUNES** na may **Fencing Permit na may numerong 020190000** ay nais kong humingi ng malinaw na kopya (clear copy) na may tatak na **CERTIFIED TRUE COPY** mula sa inyong tanggapan ng mga documentong isinumete sa inyo ni **G. ERIC ECHAGUE**, upang mabigyan ng **CERTIFICATION O CLEARANCE**, na siyang naging daan upang maisyuhan ng **FENCING PERMIT**.

Inaasahan ko ang inyong dagliang pagtugon. Maraming salamat.

MARJORIE DADAYA
Actual Occupant

July 30, 2019

MR. ARNOLDO A. BLAZA JR.
OIC CENRO
CORON, PALAWAN

07-30-2019
2019-2433

DEAR CENRO BLAZA,

Greetings!

I, MARJORIE DADAYA, legal age, resident of Barangay Poblacion 2, Coron, Palawan and actual occupants of a certain parcel of land located at Burgos St., Barangay Poblacion 2, Coron, Palawan would like to request from your good office to issue certification of land classification covering the area of Burgos St. Barangay Poblacion 2, Coron, Palawan.

This request is for reference purposes.
Thank you and more power!

Very respectfully yours,

MARJORIE DADAYA
Actual Occupant

0936-687-0510

Republic of the Philippines
Province of Palawan
Municipality of Coron
Barangay Poblacion 2

OFFICE OF THE PUNONG BARANGAY

CERTIFICATION

TO WHOM IT MAY CONCERN:

THIS IS TO CERTIFY that the SPOUSES (Deceased) **Lamente Sandoval and Josefa Dacunnon** has acquired a parcel of land situated at Barangay Poblacion 2,Coron,Palawan under Certificate of Title No.316 (photocopy hereto attached).

This certification is issued upon request of **MRS.MARJORIE E.DADAYA** to support his application to secure building permit (that the Barangay interpose no objection for the construction of the said building).

Given this 5th day of June,2015 at Barangay Poblacion 2,Coron.Palawan,Philippines.

OSCAR A.AMIT JR.
Punong Barangay

SPECIAL POWER OF ATTORNEY

KNOW ALL MEN BY THESE PRESENTS:

I, **EDGARDO DADAYA SR.,** of legal age, Filipino citizen, married, and a resident of Barangay Borac, Coron, Palawan, Philippines, have named, constituted and appointed by these presents, **MARJORIE ECHAGUE DADAYA,** of legal age, Filipino citizen, and a resident of Barangay Poblacion II, Coron, Palawan, Philippines, to be my true and lawful attorney-in-fact, to perform the following acts, to wit:

1. To appear on my behalf at the Office of the Barangay Chairman/Lupong Tagapamayapa of Barangay Poblacion II, Coron, Palawan in connection with the complaint filed against me by Eric Echague;

2. To enter into any amicable settlement and to submit documents and evidence on my behalf in connection with the said complaint;

3. To do and perform all other acts and deeds necessary and relevant accomplish the objectives of this instrument.

HEREBY GIVING AND GRANTING unto my said attorney-in-fact full power and authority whatsoever requisite, necessary or proper, to be done in or about the premises as fully to all intents and purposes, as I might or could lawfully do if personally present, and hereby ratifying and confirming all that my said attorney shall lawfully do, or cause to be done under and by virtue of these presents.

IN WITNESS WHEREOF, we have hereunto affixed my signature this 12th day of July 2019 at Coron, Palawan, Philippines.

Edgardo Dadaya

EDGARDO DADAYA SR.
Principal

I accept:

MARJORIE ECHAGUE DADAYA
Attorney-in-fact

Signed in the presence of:

PAULO BRIONES
Witness

LOURENCE MAGALLANES
Witness

ACKNOWLEDGMENT

Republic of the Philippines)
Province of Palawan)
Municipality of Coron) S.s.

BEFORE ME, a duly commissioned Notary Public for the City of Puerto Princesa City and Palawan, this 12th day of July 2019 personally appeared **EDGARDO DADAYA SR. and MARJORIE ECHAGUE DADAYA** who executed their proof of identity as indicated above and known to me to be the same persons who executed the foregoing Special Power of Attorney and acknowledged to me that the same is their free act and deed.

WITNESS MY HAND AND NOTARIAL SEAL, this 12th day of July 2019 in the Municipality of Coron, Province of Palawan.

Doc. No. 64;
Page No. 14;
Book No. 50;
Series of 2019.

ATTY. ALBERT C. GARRAEZ NOTARY PUBLIC ROLL NO. 57527 PALAWAN AND PUERTO PRINCESA

ATTY. ALBERT C. GARRAEZ
NOTARY PUBLIC FOR PALAWAN
AND IN PUERTO PRINCESA CITY
UNTIL DECEMBER 31, 2020
IBP LIFETIME MEMBER NO. 01285
PTR NO. 1851456 01-03-2019

Republika ng Pilipinas)
Lalawigan ng Palawan) S.s.
Munisipyo ng Coron)

SINUMPAANG SALAYSAY

Ako, si **EDGARDO DADAYA SR.**, nasa hustong gulang, Pilipino, may asawa at kasalukuyang naninirahan sa Barangay Borac, Coron, Palawan, matapos manumpa alinsunod sa itinatakda ng batas, ay malaya at kusang loob na nagsasaad ng mga sumusunod na katotohanan:

1. Ako ay kapatid ni **JOSE DADAYA** na namatay noong ika-29 ng Marso 2003 sa Barangay Borac, Coron, Palawan; Kalakip dito bilang **Annex "A"** ang kopya ng Barangay Certification na iginawad ni Kapitan Numeriano T. Echague ng Borac, Coron, Palawan bilang katibayan ng pagkamatay ng aking kapatid;

2. Ang pirma ni **JOSE DADAYA** sa dokumentong **EXTRAJUDICIAL SETTLEMENT OF ESTATE OF THE LATE SPOUSES LAMENTE SANDOVAL and JOSEFINA DACUNNON** na may petsang November 06, 2018 ay hindi niya pirma dahil noong isinagawa ang nasabing dokumento ang aking kapatid ay namayapa na; Kalakip dito bilang **ANNEX "B"** ang kopya ng nasabing dokumento;

3. Imposibleng mangyari na may partisipasyon pa ang aking kapatid sa nagawang hatian ng lupang aming minana mula sa aming mga ninuno noong taong 2018 dahil siya ay namatay noong taong 2003;

4. Ang salaysay na ito ay malaya at kusang-loob kong ginawa upang ilahad ang buong pangyayari.

BILANG PATUNAY ay nilagdaan ko ito ngayong ika-12 ng Hulyo, 2019 sa Bayan ng Coron, Palawan.

Edgardo Dadaya
EDGARDO DADAYA SR.
May Salaysay
VIN: 5309-0038A-D1157ETD10000

NILAGDAAN AT SINUMPAAN sa harap ko ngayong ika-12 ng Hulyo 2019 dito sa Munisipyo ng Coron, Palawan, ang may salaysay ay nagpakita ng kanyang pagkakakilanlan na nakasaad sa ilalim ng kanilang mga pangalan. Pinapatunayan ko na ang salaysay na ito ay kusang loob at malaya nilang isinagawa at lubos nilang nauunawaan ang nilalaman nito.

Doc. No. 63;
Page No. 14;
Book No. 50;
Series of 2019.

ATTY. ALBERT C. GARRAEZ
NOTARY PUBLIC FOR PALAWAN
AND IN PUERTO PRINCESA CITY
UNTIL DECEMBER 31, 2020
IBP LIFETIME MEMBER NO. 012852
PTR NO. 1851456 01-03-2019

AFFIDAVIT OF ADVERSE CLAIM

We, **MARIETTA SANDOVAL FERRERA and FLORINA SANDOVAL FERRERA**, both of legal ages, married and residents of 3309A BSA Twin Towers Bank Dr., Ortigas, Mandaluyong City, Philippines, after having duly sworn to in accordance with law hereby depose and say THAT:

1. We are surviving heirs of the late **LAMENTE SANDOVAL,** being the grandchildren of the late **NICOLASA VDA. DE SANDOVAL** married to **AGUSTIN SANDOVAL,** heir of LAMENTE SANDOVAL;

2. At the time of his demise, **LAMENTE SANDOVAL** left a parcel of land located at Barangay Poblacion 2, Coron, Palawan and embraced and covered by **ORIGINAL CERTIFICATE OF TITLE NO. 316** containing an area of **ONE THOUSAND TWO HUNDRED TWENTY SIX (1, 226) SQUARE METERS.** Copy of the said Original Certificate of Title No. 316 is hereto attached as **Annex "A"** to form an integral part hereof;

3. On November 6, 2018, a document denominated as "**EXTRAJUDICIAL SETTLEMENT OF ESTATE OF THE LATE SPOUSES LAMENTE SANDOVAL AND JOSEFA DACUNNON**" which is hereto attached as **Annex "B"** was purportedly executed by the HEIRS OF THE LATE SPOUSES LAMENTE SANDOVAL AND JOSEFA DACUNNON";

4. In the said document, our grandmother, **NICOLASA VDA. DE SANDOVAL** was included as one of the heirs, represented by **ISABELITA P. SAN JOSE**, by virtue of a Special Power of Attorney allegedly executed by **MARIETTA SANDOVAL FERRERA FIEMLYN;**

5. However, I, **MARRIETTA SANDOVAL FERRERA**, heir of NICOLASA VDA. DE SANDOVAL, **never executed a Special Power of Attorney in favour of ISABELITA P. SAN JOSE** or of any person to act on my/our behalf in the execution and signing of the said document;

6. We never gave, conferred or granted any authority to anyone to execute and sign any document, paper or instrument pertaining to the above-described property on or before November 06, 2018;

7. Further, we have not executed and signed any document or instrument transferring, waiving, relinquishing or ceding our rights and interests as heirs of **SPOUSES LAMENTE SANDOVAL AND JOSEFA DACUNNON** over the said parcel of land in favour of anyone;

8. Recently, we have learned that there are heirs who are entering into certain transactions with third persons involving the said property without our consent and authority;

9. As these transactions might adversely affect and jeopardize our rightful share over the said estate of the late **SPOUSES LAMENTE SANDOVAL AND JOSEFA DACUNNON,** we are executing this Affidavit to annotate and register our adverse claim on the said property covered by **ORIGINAL CERTIFICATE OF TITLE NO. 316** containing an area of **ONE THOUSAND TWO HUNDRED TWENTY SIX (1, 226) SQUARE METERS** before the Registry of Deeds of Palawan, the Provincial Assessor's Office and Municipal Assessor's Office to inform and warn the public that we are the ones who have legitimate rights and interests over the said property as the lawful heirs of late **SPOUSES LAMENTE SANDOVAL AND JOSEFA DACUNNON;**

8. We are executing this Affidavit freely and voluntarily to attest to the truth of the foregoing and for whatever legal purpose it may serve.

IN WITNESS WHEREOF, we have hereunto affixed our signature this 15th day of June, 2019 at Municipality of Coron, Palawan, Philippines.

MARIETTA SANDOVAL FERRERA	**FLORINA SANDOVAL FERRERA**
Principal	*Principal*
Passport ID No. PB1165352	Passport ID No. 513302203
Issued on March 15, 2004	Issued on 07 Feb. 2019

SUBSCRIBED AND SWORN TO before me this 15th day of June, 2019 at Coron, Palawan, personally appeared **MARIETTA SANDOVAL FERRERA** and **FLORINA SANDOVAL FERRERA** who presented their proof of identity as indicated above.

Doc. No. 181;
Page No. 38;
Book No. 49;
Series of 2019.

ATTY. ALBERT C. GARRAEZ
NOTARY PUBLIC
ROLL NO. 57527
PALAWAN AND PUERTO PRINCESA

ATTY. ALBERT C. GARRAEZ
NOTARY PUBLIC FOR PALAWAN
AND IN PUERTO PRINCESA CITY
UNTIL DECEMBER 31, 2020
IBP LIFETIME MEMBER NO. 012852
ROLL NO. 57527

August 5, 2019

DILG - CORON, PALAWAN
RECEIVED
SIGNATURE
DATE 8-05-19
TIME 3:40 p.m.
RECORDS UNIT

HON. DANIEL N. FLORIDA III
LOCAL GOVERNMENT OPERATIONS OFFICER VI
DILG CORON, PALAWAN

8/5/19

Sir,

Magandang araw!

Nais po naming isumete ang **CERTIFICATION** na naisyu ni ***Punong Brgy. Oscar Amit ng Brgy. 2, Coron, Palawan*** na naging dahilan ng pagkakaisyu ng **FENCING PERMIT** ni **G. ERIC ECHAGUE** na may numerong **020190000**.

Ako po si **MARJORIE DADAYA** actual occupant ng babakuring lote ni G. Eric Echague ay maaaring masarhan ang pangunahing daraanan at wala na kaming ibang mararaanan pa kung sakaling masarhan ang bahaging harapan na naging sanhi na ng aking problema araw-araw sapagkat may kasama kaming naninirahan na sanggol na maaaring matulad ang pagbabakod na ginawa kay **G. REDEMPTO ECHAGUE.**

Ako po **si ELLEN CUSTODIO PAULO** isang solo parent, may apat na anak at siyang naninirahan at may-ari ng tindahan ay kasama sa babakurin ni G. Eric Echague na kung sakaling masarhan ang harapang bahagi ng Tindahan ay wala na akong mapagkukunan ng source of income na siyang ikinabubuhay at ipinapantustos ko sa pag-aaral ng aking apat na anak.

Isinusumete po namin ang **CERTIFICATION** na ibinigay ni Punong Brgy. Oscar Amit upang inyo po itong maimbestigahan kung may pagkakamali o wala.

Kung may pagkakamali po, sana po ay mabigyan ng **aksyon ng inyong Tanggapan** upang hindi na pamarisan ng ibang kawani ng Gobyerno at wala ng ***INA O NANAY*** na tulad namin ang nangangamba na maperwisyo at mag-alala na wala ng mapakain o maipangtustus sa mga anak tulad ng nangyayari sa amin ngayon sapagkat napakahirap magparevoke ng pirma ng ating **Municipal Engineer na si Ike Parangue** sa kabila ng mga sulat at hinaing namin sa kanya.

Kalakip po ang larawan ng lugar na pagbabakuran.

Marami pong salamat.

MARJORIE DADAYA
ACTUAL OCCUPANT

ELLEN CUSTODIO PAULO
ACTUAL OCCUPANT / SOLO PARENT

cc:

OFFICE OF THE MAYOR
CORON, PALAWAN

OFFICE OF THE OMBUDSMAN
AGHAM ROAD DILIMAN QUEZON CITY

Republic of the Philippines
Province of Palawan
Municipality of Coron
Barangay Poblacion 2

OFFICE OF THE PUNONG BARANGAY

CERTIFICATION

TO WHOM IT MAY CONCERN:

THIS IS TO CERTIFY that **RAFAELA TAN ECHAGUE** (deceased) ,represented by her heir ,**ERIC O. ECHAGUE**, of legal age, married , one of the heirs of SPOUSES LAMENTE SANDOVAL (deceased) and JOSEFA DACUNNON (deceased) , known to be the absolute owner of a certain area with Original Certificate of Title No. 316 and land area of one thousand two hundred twenty six (1,226 sq.mtrs.) square meters located at Barangay Poblacion 2, in this barangay.

CERTIFIES FURTHER , that **RAFAELA TAN ECHAGUE** owned and assigned to her a portion of lot from a parcel of land mentioned above with **lot no, 68-O** measuring an area of **132 square meters** , based on a duly notarized Extra Judicial Settlement of the State of the late Spouses Lamente Sandoval and Josefa Dacunnon by the Heirs , and the Subdivision Plan of Land is hereto attached.

This CERTIFICATION is being issued upon request of Mr. Eric O. Echague for his application for fencing permit and whatever entered legal purpose/s it may serve him best.

Given This 20th day of June 2019 at Bgy. Poblacion 2. Coron,Palawan.

OSCAR A. AMIT JR.
Punong Barangay

SITE NA BABAKURIN

JULY 25, 2019

ENGR. IKE PARANGUE
MUNICIPAL ENGINEER
CORON, PALAWAN

SIR,

Magandang araw!

Ako po si **MARJORIE DADAYA**, nasa hustong edad, naninirahan sa bahaging lote ng Barangay 2, Coron, Palawan, sa dahilang mahirap ang abogado sa ating lugar, nais kong iparating sa inyong tanggapan sa abot ng aking makakaya na ipaunawa at ipabatid ang aking saloobin na ako ay humahadlang at hindi sumasang-ayon na bakurin ang harapan o saan mang bahagi ng aming tahanan ni **G. ERIC ECHAGUE** na inisyuhan ng inyong tanggapan **ng FENCING PERMIT** na may numerong **020190000** na kanilang isasagawa sa **AUGUST 5, 2019** dahil sa mga sumusunod na sirkumstansya at base na rin sa pagkakaunawa ko sa documentong aking nakuha mula sa inyong tanggapan;

1) hindi pa siya o wala siyang documentong nagpapatunay na siya, si **MR. ERIC ECHAGUE** na ang bagong nagmamay-ari ng loteng nais bakurin, na ayon sa inyong tanggapan ang isa sa requirements ng pagbabakod ay dapat **approved titled of lot**.
2) walang muhon na pagbabasehan
3) may mga taong naninirahan sa loteng nais nilang bakurin at maaapektuhan kung sakaling masarhan ang harapang bahagi.
4) Ang kanilang isinumeteng **REQUIREMENTS TULAD NG EXTRAJUDICIAL** ay may pandaraya, patunay po ang mga sumusunod na documento na nakalakip sa sulat na ito:

    a. Adverse claim nina **GNG. MARIETA SANDOVAL FERRERA at GNG. FLORINA SANDOVAL FERRERA.**

7/25/19

Serial Number:
X2SK030275
ATTGTR.24.05
BK BK Y M C Y M C

b. Death Certificate ni **G. JOSE DADAYA** na pumirma sa extrajudicial may labinlimang taon (15 years) ng patay at pinatunayan ito ng kanyang kapatid na si **EDGARDO DADAYA.**

5) Wala pa silang approved plan at ang kanilang isinumete ay isang survey plan pa lamang

Kalakip din po sa sulat na ito ang electronic file ng **Original Certificate of Title** ng 2019 na malinis at wala pang annotation ng Extrajudicial at paghahati (subdivision) sa lupa, samakatuwid nasa may-ari pa ang lahat ng karapatan.

Nakalakip din po rito ang photocopy ng **COURT ORDER AT DECISION NG KORTE** tungkol sa re-issuance of title ni **G. ALFONSO PAMADO** na maaaring makatulong sa inyong pagdesisyon.

Umaasa sa inyong agarang pagtugon.

MARJORIE DADAYA
ACTUAL OCCUPANT

cc:

OFFICE OF THE MAYOR
CORON, PALAWAN

OFFICE OF THE COMMISSION ON HUMAN RIGHTS
UNIT 7, CNMS BUILDING,
TINIGUIBAN, PUERTO PRINCESA CITY

OFFICE OF THE OMBUDSMAN
AGHAM ROAD DILIMAN QUEZON CITY

PRESIDENTIAL ACTION CENTER
MALACAÑANG MANILA

RECEIVED
31 JUL 2019

JULY 30, 2019

ENGINEER IKE PARANGUE
MUNICIPAL ENGINEER
MUICIPALITY OF CORON,
CORON, PALAWAN

OFFICE OF THE MAYOR
DATE 7/31/19

Sir,

Magandang araw!

Dahil sa pangamba na kami ay mabakod at malaking perwisyo ang maaari naming maranasan, ako ay muling sumulat sa inyong tanggapan upang hilingin ang inyong kasagutan ukol sa pagbabakod na mangyayari sa August 5, 2019.

Naipabatid at naisumete na namin sa iyong Tanggapan ang mga documento laban sa Fencing Permit na inisyu ng iyong Tanggapan kay **G. ERIC ECHAGUE** na may **FENCING PERMIT** na **020190000**.

Kalakip ng sulat na ito ang **CERTIFICATION** na galing sa **MUNICIPAL PLANNING AND DEVELOPMENT** na walang Locational Clearance si **G. ERIC ECHAGUE**.

Kalakip din ang **TAX DECLARATION NI G. LAMENTE SANDOVAL** na siyang nagmamay-ari ng loteng may **TITULONG 316** at hindi si **G. ERIC ECHAGUE.**

Nais naming malaman ang iyong kasagutan bago kami mabakod na gagawin ngayong August 5, 2019.

Maraming salamat.

MARJORIE DADAYA
Actual Occupant

cc:

OFFICE OF THE MAYOR
CORON, PALAWAN

OFFICE OF THE COMMISSION ON HUMAN RIGHTS
UNIT 7, CNMS BUILDING,
TINIGUIBAN, PUERTO PRINCESA CITY

OFFICE OF THE OMBUDSMAN
AGHAM ROAD DILIMAN QUEZON CIT

the purpose and duly enacted into an Ordinance by the Sangguniang Panlalawigan under Ordinance No. 1914-2018 dated March 26, 2018. It does not and cannot by itself alone confer any ownership or legal title to the property.

SWORN STATEMENT No.: 066-09-551
SWORN STATEMENT Date: 04-15-2019

Machine Validation. Printed by Karen M. Gabayan/ 4:25:18 PM

Republic of the Philippines
Province of Palawan
MUNICIPALITY OF CORON
MUNICIPAL PLANNING AND DEVELOPMENT OFFICE

CERTIFICATION

This is to certify that as per record of the Municipal Planning and Development Office have not issued any **Locational Clearance** to **Mr. Eric Echague** regarding the fencing of his lot in Bgy. Poblacion 2, Coron, Palawan

Issued this 26th day of July 2019 upon request of **Ms. Marjorie Dadaya** for whatever legal purpose it may serve.

ENP/ENGR. MICHAEL ADRIAN FABABEIR, *MPA, MAURP*
MPDC

TC DC

TAX DECLARATION OF REAL PROPERTY

T.D. No.: 18-09-002-0288 Property Identification No.: 066-09-002-01-009-.

Owner: SPS. LAMENTE SANDOVAL AND JOSEFA DACUNNON TIN:

Address: BARANGAY POBLACION II, CORON, PALAWAN Telephone No.:

Administrator/Beneficial User TIN:

Address: Telephone No.:

Location of Property: BARANGAY POBLACION II CORON, PALAWAN

(Number and Street) (Barangay/District) (Municipality & Province)

OCT/TCT/CLOA No. OCT NO. 316 Survey No.

CCT. Lot No. 68

Date: 10-04-1917 Block No.

Boundaries: North: BGY. POB. IV South: ALN 011

East: ALN 010 West: ALN 008 & 011

KIND OF PROPERTY ASSESSED:

☑ LAND

☐ BUILDING

No. of Storeys.

Brief Description:

☐ MACHINERY

Brief Description:

☐ Others:

Specify:

Classification	Area	Unit Value	Market Value	Actual Use	Assessment Level	Assessed Value	Taxability
COMMERCIAL (C-2)	1,226.00 sq.m	4,600 Php	5,639,600.00	COMMERCIAL	20 %	Php 1,127,920.00	TAXABLE
Total	1,226.00 sq.m		Php 5,639,600.00			Php 1,127,920.00	

Total Assessed Value: ONE MILLION ONE HUNDRED TWENTY-SEVEN THOUSAND NINE HUNDRED TWENTY PESOS

(Amount In Words)

Taxable ☑ Exempt ☐ Effectivity of Assessment/Reassessment: 2020 YEAR

Approved by:

EUVICA M. COLBE, REA

PROVINCIAL ASSESSOR

4/15/2019

Date

This declaration cancels TD No. NEW Previous A.V. Php. 0.00 Previous PIN: NONE

Previous Owner: NONE Previous Area: 0 sq.m.

Memoranda:

DECLARED PER OCT NO. 316 ISSUED ON OCTOBER 04, 1917 SWORN STATEMENT FILED. LATE FILING OF SS. 25,000.00, O.R. NO. 1188328, ISSUED ON APRIL 15, 2019 AT PUERTO PRINCESA CITY SUBJECT TO TEN (10) YEARS BACK TAXES BASED ON THE ASSESSED VALUE SHOWN BELOW. NO PENALTY IF PAID ON OR BEFORE SEPTEMBER 30, 2019.

Assessed Value subject to tax:

Year Covered	Assessed Value
2010-2013	306,500.00
2014-2018	367,800.00
2019	1,127,920.00

Note: This declaration is for real property taxation purposes only and the valuation indicated herein are based on the schedule of unit market values prescribed for the purpose and duly enacted into an Ordinance by the Sangguniang Panlalawigan under Ordinance No. 1914-2018 dated March 20, 2018. It does not and cannot by itself alone confer any ownership or legal title to the property.

SWORN STATEMENT No.: 066-09-551
SWORN STATEMENT Date: 04-15-2019

Machine Validation. Printed by Kareen M. Gabayan/ 4:25:18 PM

Republika ng Pilipinas
Lalawigan ng Palawan
Munisipyo ng Coron
Brgy. 2 Coron Palawan

Para: March 13, 2007

Sa Lahat ng mga Kinauukulan:

Kami po na mga taga pugoan ng Sitio ng Lawanit Tan Sandoval (Patay na) na may titulo 316 ng Brgy. 2 Coron Palawan

Pangatlong na anak Jose Paculan Tan Sandoval (Patay na) ay naghahabol na kanyang mga Heredero (Taga pugoan) na may (5) limang anak na sila.

PANGALAN

1. Pitra Tan
2. Alejandro Tan
3. Nicolas Tan
4. Rafaela Tan
5. Josefina Tan

Kami po ng mga Apo Heredero na kaan bukig ang naghahabol sa lupang ito, taong kasalukuyan March

PANGALAN			SIGNATURE
1. Fedelina	Tan	Tabao	Fedelina Tan Tabao
2. Oscar	Tan	Austria	Bruno Tan Brg
3. [illegible]	[illegible]	[illegible]	[illegible]

PANGALAN	SIGNATURE
4. RAMFEL LUIS TAN LOYLS	[illegible]
5. LITA E. ESCARDA	Lita E. Escarda
6. RAMIRO TAN	Ramiro B. Tan
7. MANUEL D MENDOZA	[illegible]

Ako po si Marjorie Echagne Dodayo na anak ni Edgardo Dodayo, na apo ni Federico Tan Tabale ay pinahihintulutan ng aking mga lola at lola, na magpatayo ng bahay na nasabing maraming taga. ng bagay 2 bora Palawan

SUBSCRIBED AND SWORN to before me this 2nd day of June 2008, at Coron, Palawan, Philippines.

Doc. No. 143
Page No. 29
Book No. IV
Series of 2008

ISMAEL R. RERERA
Notary Public
Until Dec. 31, 2008
PTR No. 7042370 J
Issued On Jan. 2, 2008
Issued At Coron, Palawan

CERTIFIED TRUE COPY
IKE D. P.
MUNICIPAL ENGINEER

EXTRAJUDICIAL SETTLEMENT OF
ESTATE OF THE LATE SPOUSES LAMENTE SANDOVAL
AND JOSEFA DACUNNON BY THE HEIRS

KNOW ALL MEN BY THESE PRESENTS:

This **Extra-judicial Settlement of Estate** made and executed by and among the only surviving heirs of the late spouses **LAMENTE SANDOVAL** and **JOSEFA DACUNNON** , namely: **MANUEL TAN, JOSE TAN, SIMPLICIO TAN SR., SOLEDAD TAN, NICOLASA TAN.**

1. **MANUEL TAN** married to **TRINIDAD SANDOVAL** – survived by their heirs namely:

    1. Concepcion Tan Ortega – deceased, resident of Coron, Palawan, Compulsory Heir – Ramon Ortega (grandson) of legal age ,married herein represented by Gustavo T. Torres by virtue of Special Power of attorney photocopy herein attached and form an integral part hereof

    2. Ines Tan Dormile – survived by her heir Erlinda Dormile herein represented by Gustavo Torres by virtue of Special Power of Attorney photocopy herein attached and form an integral part hereof.

    3. Pilar Tan Echague- survived by her four children namely:

        1. Mario T. Echague – of legal age ,widow ,residing in Coron, Palawan
        2. Trinidad E. Rafols – of legal age,widow, residing in Coron, Palawan
        3. Prescilla E. Concepcion-of legal age,widow, residing in Coron, Palawan
        4. Redempto T. Echague – of legal age, married, residing in Coron, Palawan
        5. Cleofe T. Echague- deceased, survived by wife and children namely: Angelica R. echague, Ma. Cleofe E. Nallas , Shahani E. Abis, Wyndle R. Echague, Mark R. Echague, Maria Paz E. Velasquez, hereto duly represented by their mother Angelina R. Echague by virtue of Special Power of Attorney, photocopy hereto attached and form an integral part hereof.

    4. Maria Tan Torres –deceased survived by children namely:
        1. Gustavo T. Torres - of legal age, married, resident of Coron, Palawan.
        2. Eleanor T. Reunir - of legal age, widow, resident of Coron, Palawan.
        3. Rowena T. Balon –of legal, age, married, resident of Coron, Palawan all are herein represented by their sibling Gustavo T. Torres by virtue of Special Power of Attorney , photocopy hereto attached and form an integral part hereof.

    5 Nemesina Tan Garraez- Deceased, survived by children Namely and duly represented by their sibling Antonio Garraez by virtue of Special Power of Attorney hereto attached and form an integral part hereof.

CERTIFIED THRU COPY
IKE D. PARANG
MUNICIPAL ENGINEER

1. **Fedelina T. Dadaya** – deceased with seven children namely:

   1. Edgardo dadaya Sr. – of legal age,married
   2. Reynaldo Dadaya – of legal age,married
   3. Corazon D. Paculdas- deceased with child namely Robina P. macoy of legal age. married
   4. Mauro Dadaya- of legal age, married
   5. Gaudencio Dadaya- of legal age, married
   6. Elenita Dadaya – of legal age, single
   7. Jose Dadaya - of legal age, married

2. **Simfroniana Tabale Feria** – deceased with (6) six children namely herein duly represented by Edgardo Dadaya Sr. by virtue of Special power of Attorney hereto attached and form an integral part hereof.
   1. Armando Feria – of legal age, married
   2. Trinidad Feria-of legal age, married
   3. Genevieve F.Royo-of legal age, married
   4. Rosario F. Arzaga – of legal age , married
   5. Erlinda F. Velasco- of legal age, married

   6. Rafaela Tan Echague – deceased with children namely:
      1. Efren Echague – deceased survived by son Eric Echague
      2. Lita E. Escarda – of legal age,married
      3. Louella E. Tablazon – of legal age,married

- WITNESSETH -

1. **Whereas**, the above named compulsory heirs are the surviving grandchildren and great grandchildren of decedent spouses Lamente Tan and Josefa Dacunnon.

2. **Whereas**, spouses Lamente Tan and Josefa Dacunnon , both died intestate , witout Last Will or Testament , and without any outstanding debt in favor of any person or entity;

3. **Whereas,** at the time of death of the late spouses Lamente and Josefa, they are the absolute and registered owns of a parcel of land embraced in OCT No. 316 with an area of ONE THOUSAND TWO HUNDRED TWENTY SIX (1,226) SQUARE METERS located in the township of Coron , Palawan (now Barangay Poblacion 2, Coron, Palawan) and more particularly described as follows:

DESCRIPTION OF THE LAND
OCT NO. 316

A PARCEL OF LAND (Lot N). 68 of the Cadastral Survey of Coron) . With the improvements thereon, situated in the township of Coron. Bounded on the NE, by Calle Burgos; on the SE., by Lot N0. 69; On the SW by Lot N0S. 69 and 66;m and on the NW by Calle San Jose. Beginning at a point marked"1" on plan, being N., 64 deg. 46 W., 144.60 m. from B.L.L.M.1; thence n. 78' 20E., 24.80 to point "2", thence N.11' 22 W., 45.30 m. to point 3; thence S. 79 deg. 47 W., 31.92 m. to point "4" thence S.25 deg. 26E., 32.37 to point 5; thence S.8'27deg. E., 14.77E., to the point of beginning; Containing an area of ONE THOUSAND TWO HUNDRED TWENTY SIX (1,226) SQUARE METERS. All points referred to are indicated on the plan; bearings true; declination 1'20E., date of survey, January 25, 1913.

4. **Whereas.** on the Original Certificate of Title E-316 the owners' names appeared Lamente Sandoval and Josefa Dacunnon. In truth Lamente Sandoval has chinese name and is known in the township of Coron, Palawan to be Laurente Tan. On the other hand his Filipino wife is known as Josefa Daculnon. That the names appearing on the Original Certificate of Title E-316 as Lamente Sandoval

ERIC ECHAGUE LOUELLA E. TABLAZON

1. Corazon G. Reyes – of legal age, married, resident of Coron, Palawan.
2. Antonio Garraez – of legal age, married
3. Sonia G. Navalta – of legal age, married
4. Wilfredo Garreaz –of legal age, married

6 **Milagros Tan Rabang** – Deceased, survived by her two daughters Yolanda Rabang Dadaya and Milagros R. Zabala of legal ages represented by Yolanda Dadaya thru SPA herein attached.
7 **Bienvenido Tan**- deceased, without known issue.

2. **SIMPLICIO TAN SR.** married to **PAZ GREGORIO**- Both deceased with nine children namely:
Ramiro Tan, Jose Tan, Rosa Tan, Claudina Tan, Digna Tan Braganza Modesto Tan, Simplicio Tan Jr., Generoso Tan all deceased except Marina T. Gajardo.

That during the lifetime of Simplicio Tan Sr. he executed an Affidavit of Affirmation and Confirmation of Sale of his share in favor of Nicolasa Tan, the document is duly acknowledged and notarized by Celestino V. Tomines, Notary Public hereto attached to form an integral part hereof.

SOLEDAD TAN married to **TEODORO PAMADO** –both deceased, survived by their children namely:

1. **Alfonso Pamado Sr**- of legal age, married, resident of Coron, Palawan.
2. **Josefa P. Dera** - deceased, survived by son Oscar P. Dera of legal age, married resident of Coron, Palawan represented by Isabelita P. San Jose by virtue of Special Power of Attorney, copy hereto attached to form an integral part hereof.

NICOLASA TAN SANDOVAL married to AGUSTIN SANDOVAL. Nicolasa died a widow had a child named Salud Tan Sandoval deceased, survived by her daughter Marietta Sandoval Ferrera –Flemlyn, represented by Isabelita P. San Jose by virtue of Special Power of Attorney, photocopy hereto attached to form an integral part hereof.

That during her lifetime she executed an instrument known as Affidavit of Acknowledgement of a Sale of her inheritance in favor of Rafaela Tan Echague duly acknowledged and notarized by Luis Bacosa, Notary Public, photocopy hereto attached to form an integral part hereof.

JOSE TAN married to **VICTORIANA TAN** - deceased , with children namely:

1. **Nicolas Tan** – deceased with surviving son Roberto Tan
2. **Clepatra Tan-Danganan** – deceased with children namely:
   1. Manuel Mendoza- of legal age ,married
   2. Romualdo Maligaya – of legal age ,married
3. **Josefina Tan Austria** – deceased survived by son
   1. Oscar Austria – of legal age , married
3. **Alejandra Tan Tabale** – deceased, with two children namely:

CERTIFIED THRU COPY
IKE PAPARANGUL
MUNICIPAL ENGINEER

Laurente Tan and his wife Josefa Daculon are one and the same persons.

5. **Whereas,** to date there are no known debts or obligations due against the estate of the decedents and no intestate proceedings has yet been instituted against their estate.

6. **Whereas,** invoking the provisions of Section 1, rule 74 of the Rules of Court all parties hereto, being of legal age and with full capacity to contract, hereby by these presents agree to divide and partition the above described estate and accordingly adjudicate as they do hereby the same among and between themselves in the manner and proportion established by law :

a) To settle, divide, partition and adjudicate the above described real property, equally and equitably between themselves after mutual deliberations, government confirmation and acknowledgement of conveyances made by siblings and observance of present parameters of the estate in accordance with the government zoning of the national highways and local streets and alley ways hereto attached prestations of relocation survey of the property accordingly for each heir, photocopy hereto attached and form an integral part hereof and described as follows.

1/5 (245.2) Sq. M. TO Heirs of Manuel Tan
1/5 (245.2) Sq. M. TO Heirs of Simplicio Tan
1/5 (245.2) Sq. M. TO Heirs of Soledad Tan
1/5 (245.2) Sq. M. TO Heirs of Nicolasa Tan
1/5 (245.2) Sq. M. TO Heirs of Jose Tan

CERTIFIED THRU COPY
IKE D. PARANGUI
MUNICIPAL ENGINEER

RELOCATION SURVEY as per attached:

TECHNICAL DESCRIPTIONS
LOT- 68 F- MANUEL TAN (MARIA TAN TORRES)

LINES	BEARINGS	DISTANCES
1-2	N.79'47*E.,	6.91 M.
2-3	S.12'10*E.,	4.72 M.
3-4	S. 79"47*W.,	7.07 M.
4-1	N.10'138W.,	4.72 M.

LOT 68-G-PILAR TAN ECHAGUE (MANUEL TAN SANDOVAL)

1-2	N. 10'13*W.,	4.54 M.
2-3	N.79'47*E.,	0.32 M.
3-4	N.79'47*E.,	7.07 M.
4-5	S.11'22*E.,	4.33 M
5-1	S.78'09*W.,	7.49 M.

LOT 68-H MILAGROS TAN RABANG (MANUEL TAN SANDOVAL)

1-2	S.10'13*E.,	4.72 M.
2-3	S.79'47*W.,	0.32 M>
3-4	S.79'47*W.,	6.67 M.
4-5	N.10'13*W.,	4.72 M.
5-6	N.79'47*E.,	0.26 M.
6-1	N.79'47*E.,	6.73 M.

LOT 68-1 NEMESINA TAN GARRAEZ (MANUEL TAN SANDOVAL)

1-2	S.78'09*W.,	7.11 M.
2-3	N. 10'13*W.,	4.75 M.
3-4	N. 79'47*E.,	0.44 M.
4-5	S. 79'47**E.,	6.67 M.
5-1	S. 10'13*E.,	4.54 M.

Eric Echague Louella F. Tablazon

LOT 68 –J BIENVENIDO TAN, CONCEPCION TAN ORTEGA, INES TAN DORMILE (MANUEL TAN SANDOVAL).

1-2	N. 79'47*E.,	1.75 M.
2-3	S. 10'13*E.,	4.72 M.
3-4	S. 79;47*W.,	0.44 M.
4-5	S. 10'13*e.,	4.75 M.
5-6	S.78; 09*W.,	10.21 M.
6-7	N.08'27*W.,	9.76 M.
7-1	N.79;47*E.,	8.59 M.

LOT 68-O NICOLASA TAN VDA. DE SANDOVAL
(HEIRS OF RAFAELA TAN ECHAGUE)

1-2	S. 79'47* W.,	8.12 M.
2-3	N. 25'26*W.,	17.00 M.
3-4	N. 79'47*E.,	8.00 M.
4-5	S. 25'26*E.,	10.36 M.
5-1	S. 26'26*E.,	6.57 M.

LOT 68-N HEIRS OF JOSE TAN- 144.38 SQ.M.

LOT 68 –M HEIRS OF JOSE TAN

1-2	S. 11'22*E.,	4.75 M.
2-3	S. 79'47*W.,	9.93 M.
3-4	N. 25.26*W.,	4.92 M.
4-1	N.79'47*E.,	11.12 M.

LOT 68-L HEIRS OF JOSE TAN- 50.50 SQ.M.

LOT 68-K (50 SQ.M.) HEIRS OF NICOLASA TAN VDA. DE SANDOVAL

LOT 68-B HEIRS OF SOLEDAD TAN PAMADO
(ALFONSO PAMADO JR.)

1-2	S. 11'22*E.,	7.60 M.
2-3	S. 79'47*W.,	13.70 M.
3-4	N. 11'22*W.,	7.60 M.
4-1	N. 79'47*E.,	13.70 M.

LOT 68-C NICOLASA TAN VDA. DE SANDOVAL
(ISABELITA P. SAN JOSE)

1-2	S.79'47W.,	13.70 M.
2-3	N.11'22*W.,	6.25 M.
3-4	N. 79'47*E.,	13.79 M.
4-1	S. 11'22*E.,	6.25 M.

LOT 68-D NICOLASA TAN VDA. DE SANDOVAL
(MA. NELLY P. DOSONG)

1-2	S. 11'22*E.,	6.25 M.
2-3	S. 79'47*W.,	13.70 M.
3-4	N. 11'22*W.,	6.25 M.
4-1	N.79'47*E.,	13.70M.

CERTIFIED THRU COPY
IKE D. PARANG
CHIEF, LENGINEER

LOT 68-A SOLEDAD TAN PAMADO

1-2	S.79'47*W.,	13.70 M.
2-3	N.11'22*W.,	12.85 M.
3-4	N.79'47*E.,	13.70 M.
4-1	S.11'22*E.,	12.85 M.

LOT 68-E NICOLASA TAN VDA. DE SANDOVAL (OSCAR P. DERA)

1-2	S. 79'47W.,	6.73 M.
2-3	N. 11'22*W.,	3.30 M.
3-4	N. 79'47*E.,	13.70 M.
4-5	S. 10'13*E.,	3.30 M.
5-1	S. 79'47*W.,	6.91 M.

LOT 68-P- RIGHT OF WAY

1-2	N.11'22*W.,	11.32 M.
2-3	N. 11'22*W.,	4.75M.
3-4	N.11'22*W.,	20.18 M.
4-5	N.79'47*E.,	2.01 M.
5-6	S. 11'22*E.M,	12.85 M.
6-7	S. 11'22*E.,	7.60M.
7-8	S.11'22* E.,	6.25 M.
8-9	S.11'22*E.,	6.25.M.
9-10	S.11'22*E.,	3.30 M.
10-11	S.79'47*W.,	0.26 M.
11-1	S. 79'47*W.,	1.75 M.

HEREBY RATIFYING AND CONFIRMING all that our respective Attorney's –in-Fact shall lawfully do or cause to be done by virtue of Special Power of Attorney and the rights and powers therein granted individually to their corresponding Attorneys- in Fact . Further, ratifying and confirming the hereto attached Affidavit of the late Simplicio Tan Sr., in favor of his now deceased sibling Nicolasa Tan and therefore, his specific share to the exclusion of our respective individual shares, Simplicio Tan Sr's share become part and parcel and total share of his sibling Nicolasa Tan and further confirming as well the sold portion of share by Nicolsa Tan in favor of Rafaela Tan Echague accordingly. We, the surviving heirs the late spouses Lamente Tan and Josefa Dacunnon collectively confirmed, ratified, honored and respected the same attached legal instruments hereto purposely to include Simplicio Tan Sr's share specifically in favor of Nicolasa Tan, photocopies of the affidavits hereto attached and form an integral part of this instrument.

IN WITNESS THEREOF, the parties have affixed their signatures of the acknowledgement page and initialed each page of this instrument hereto on 06 NOV 2018 in Coron, Palawan.

For the Heirs of MANUEL TAN

1. **CONCEPCION TAN ORTEGA** – deceased survived by grandson

RAMON ORTEGA
BY:

GUSTAVO T. TORRES
Representative
OSCA-39915

CERTIFIED THRU COPY
IKE D. PARANG
MUNICIPAL ENGINEER

INES TAN DORMILE – Deceased survived by daughter

ERLINDA DORMILE
BY:

GUSTAVO T. TORRES
Representative
OSCA-39915

MILAGROS T. RABANG – Deceased survived by daughter
YOLANDA R. DADAYA
ID. NO. OSCA 2511

BIENVENIDO TAN – deceased, no known issue

NEMESINA TAN GARRAEZ – deceased with four children represented
BY:

ANTONIO TI GARRAEZ – As himself and for his siblings.
OSCA-ID- 2936

HEIRS OF PILAR TAN ECHAGUE- Deceased

MARIO T. ECHAGUE
OSCA-2641

TRINIDAD T. ECHAGUE
OSCA-0308

PRISCILLA E. CONCEPCION
OSCA-4064

REDEMPTO T. ECHAGUE
OSCA-0034

CLEOFE T. ECHAGUE- Deceased survived by spouse and children herein represented by their mother.

MARIA CLEOFE E. NALLAS ; SHAHANI E. ABIS ; MARK R. ECHAGUE, WYNDLE R. ECHAGUE ; MARIA PAZ E. VELASQUEZ

BY:

ANGELINA R. ECHAGUE (Mother)
Representative
OSCA- 1826

CERTIFIED THRU COPY
ME D. TABANGAY
MUNICIPAL ENGINEER

HEIRS OF MARIA TAN TORRES

GUSTAVO T. TORRES as himself
OSCA-39915

ELEANOR T. REUNIR
OSCA-026281
BY:

GUSTAVO T. TORRES
Representative

ROWENA T. BALON
BY:

GUSTAVO T. TORRES
Representative

2. **HEIR OF SIMPLICIO TAN** - **MARINA T. GAJARDO**
OSCA-_ 4188

3. **HEIRS OF SOLEDAD TAN PAMADO**

ALFONSO T. PAMADO SR.
OSCA-0018

JOSEFA P. DERA - Deceased
OSCAR P. DERA
SGD
BY:
ISABELITA P. SAN JOSE
Representative
OSCA-54795

CERTIFIED THRU COPY
UKE D. PERSONIM

4. **HEIRS OF JOSE TAN**- deceased

NICOLAS TAN - survived by **ROBERTO TAN**
OSCA- # 4851

CLEPATRA TAN DANGANAN- Deceased survived by:

MANUEL MENDOZA
ID. NO. OSCA 2242

ROMUALDO MALIGAYA
ID. NO. PESTAL 24389

JOSEFINA AUSTRIA deceased survived by son **OSCAR AUSTRIA**
OSCA-#3102

ALEJANDRA TAN TABALE- Deceased with two children

1. **FEDELINA TAN DADAYA** – Deceased with seven children

EDGARDO DADAYA SR. – **REYNALDO DADAYA** -
ID. NO 5309 - 0038A - 011576 - TP 10000 ID. NO. POSTAL 63415

CORAZON D. PACULDAS- Dec. with daughter **ROBINA P. MACOY**
ID.NO. NN - 342 - 012 - 341

MAURO DADAYA - **GAUDENCIO DADAYA** - **ELENITA DADAYA**
ID.NO. ID. NO. SSS - 03 - 880 - 2393 - 2 ID. NO. SSS - 14 - 810 - 4591 - 5

JOSE DADAYA
ID. NO.

2. **HEIRS OF SIMFRONIANA TABALE FERIA** survived by children:

ARMANDO FERIA, TRINIDAD FERIA, GENEVIEVE F. LAGAN
VERONICA F. ROYO , ROSARIO F. ARZAGA -ERLINDA F. VELASCO

BY:
EDGARDO DADAYA SR.
Representative
ID.NO.

P9.

RAFAELA TAN ECHAGUE – Deceased with three children

EFREN ECHAGUE – Deceased represented by son **ERIC ECHAGUE**
ID. NO. P.R. NO. 1004

LITA E. ESCARDA
ID. NO. OSCA 0991

LOUELLA E. TABLAZON
ID. NO. OSCA 9341

Signed In the presence of:

ACKNOWLEDGMENT

Republic of the Philippines)
Municipality of Coron) SS.
Province of Palawan)

Before me, a notary public in and for Coron, Palawan, Philippines personally appeared the Heirs and respective above-named representatives with their valid Identifications written above and under their names respectively and they presented to me the instrument **EXTRAJUDICIAL SETTLEMENT OF THE ESTATE OF THE LATE SPOUSES LAMENTE SANDOVAL AND JOSEFA DACUNNON BY THE HEIRS** who are known to me and who executed said instrument, and who acknowledged to me that the signatures on the instrument were voluntarily affixed by them for the purposes stated in the instrument, and declared to me that they have executed the instrument as their free and voluntary act and deed.

This instrument refers to the extrajudicial settlement of a parcel of land, located in Barangay 2, Coron, Palawan, consisting of nine (9) pages including this page where the acknowledgment is written.

IN WITNESS WHEREOF, We have hereunto set our names and affixed my notarial seal this 06 NOV 2018 in Coron, Palawan.

DOC. NO. 283
PAGE NO. 78
BOOK NO. 44
SERIES OF 20 18

ATTY. PERFECTO E. PE
NOTARY PUBLIC
UNTIL DECEMBER 31, 2019
ROLL NO. 25419
IBP NO. 1028599/12-1-2017
PTR NO. 4954529/1-4-2018
TIN NO. 137-555-598
MCLE EXEMPT. NO. V-000195/UNTIL 4/14/2019

CERTIFIED THRU COPY
BARANGAY
ENGINEER

Republic of the Philippines
Department of Environment and Natural Resources
MIMAROPA Region
COMMUNITY ENVIRONMENT AND NATURAL RESOURCES OFFICE
Coron, Palawan

April 21, 2021

MR. REDEMPTO ECAHGUE
Brgy. Poblacion 2, Coron, Palawanb

Dear Mr. Echague,

Warm greetings from CENRO Coron!

This is in connection with your follow up letter dated August 31, 2019 which was indorsed to this Office thru memorandum dated January 11, 2021 received by this Office on April 13, 2021. Attached is a copy of the Land Status Certification for Lot No. 68, Cad.33 (Coron Cadastre which portion is actually occupied by your family. Kindly take note that the certification was issued under the name of the original claimant Laurente Sandoval.

Please be informed that this Office cannot issue a certification under your name or anybody among the heirs as manifested on the copy Extra Judicial Settlement submitted by Mr. Gustavo T. Torres (one of the Heirs) considering that based on the documents submitted by the Assessor's Office, the tax declaration is still the name of Sps. Lamente Sadoval and Josefa Dacunnon for the total area of 1226, and the taxes for a portion of 982 square meters is being paid by Alfonso Pamado, from 1975.

However, the "Petition for the Reissuance of the Owner's Duplicate of Title (OCT) No. 316" filed by Mr. Alfonso Pamado, represented by his daughter Isabelita Pamado-San Jose was denied in the Court Decision dated July 11, 2017 rendered by Judge Leah E. Delos Reyes-Baguyo of RTC Branch 48, in Puerto Princesa City for Land Case No. 2427. And Court Order dated December 14, 2017, on the ground that Alfonso Pamado failed to submit evidence to show that he was authorized by his Coi-heirs to file the Petition for Re Issuance of OCT No. 316.

Please be informed that when all the heirs have finally settled the differences and that the partition is well in-placed, this Office will issue individual certification for all the legitimate heirs.

We hope that you are properly informed. Thank you!!

Very truly yours,

ARNOLDO A. BLAZA, JR.
OIC CENRO
/jpq

CENRO, DENR
SERIAL NO. 2021-
RELEASED
DATE: 4/21/21
BY:

Copy Furnished:

Mr. Gustavo T. Torres
One of the Co-Heirs
Brgy. Boruc, Coron, Palawan

The Regional Executive Director
DENR MIMAROPA Region
(DENR-CO-ASRMD-2019-008880)

ASEC Gilbert Gonzales III
Asst. Secretary for Field Operations,S.Luzon
DENR Visayas Avenue, Diliman Q.C.
(DENR-CO-ASRMD-2019-008880)

The PENRO
DENR-PALAWAN
(DENR-CO-ASRMD-2019-008880)

Office of the Presidential Complaint Center
Bahay Ugnayan, J.P. Laurel St.
Malacañang, Manila

Atty. Raquel Rosario M. Cunanan-Morayan
Director, Office of the Omdubsman
Agham Road, Diliman, QC

Republic of the Philippines
Department of Environment and Natural Resources
MIMAROPA Region
COMMUNITY ENVIRONMENT AND NATURAL RESOURCES OFFICE
Coron, Province of Palawan

CERTIFICATION
(Land Status)

TO WHOM IT MAY CONCERN:

THIS IS TO CERTIFY that based from the records of this Office **Lot No. 68, Cad-33, Coron Cadastre** with an area of **1,226 sq.m.** located at **Barangay Poblacion 2, Coron, Palawan** is listed for to **LAURENTE SANDOVAL**.

The lot was verified to be within the Agricultural Area **(Alienable and Disposable Zone)** per L.C. Map No. 127, Project No. 2, certified on November 23, 1933.

This corresponding Certification Fee was paid in the amount of Php.50.00 with O.R. No._____ dated _____2021.

Issued this 15th day of April, 2021 at CENRO Coron, Palawan, in compliance with memorandum dated March 4, 2021 from the Regional Executive Director, per request of Mr. Redempto Echague.

VERIFIED CORRECT:

RUBY ANN E. ECHAGUE
Credit Officer/Actg. Admin. Officer I

ARNEL D. CABAMILLAS
LMO II

ATTESTED BY:

JUDITH P. QUIRIT
LMO III
In-Charge, Regulation, & Permitting Section

EDWIN I. CAC
SEMS
In-Charge, Monitoring & Enforcement Section

FERDINAND D. GATCHALIAN
Forester III
In-Charge Conservation & Development Section

SUBSCRIBED AND SWORN TO before me this 19th day of April, 2021 at CENRO, Coron, Palawan.

CENRO, DENR
SERIAL No. 2021-0421
4-19-21

ARNOLDO A. BLAZA, JR.
OIC CENRO 4/19/21

Not valid without the CENRO Official seal

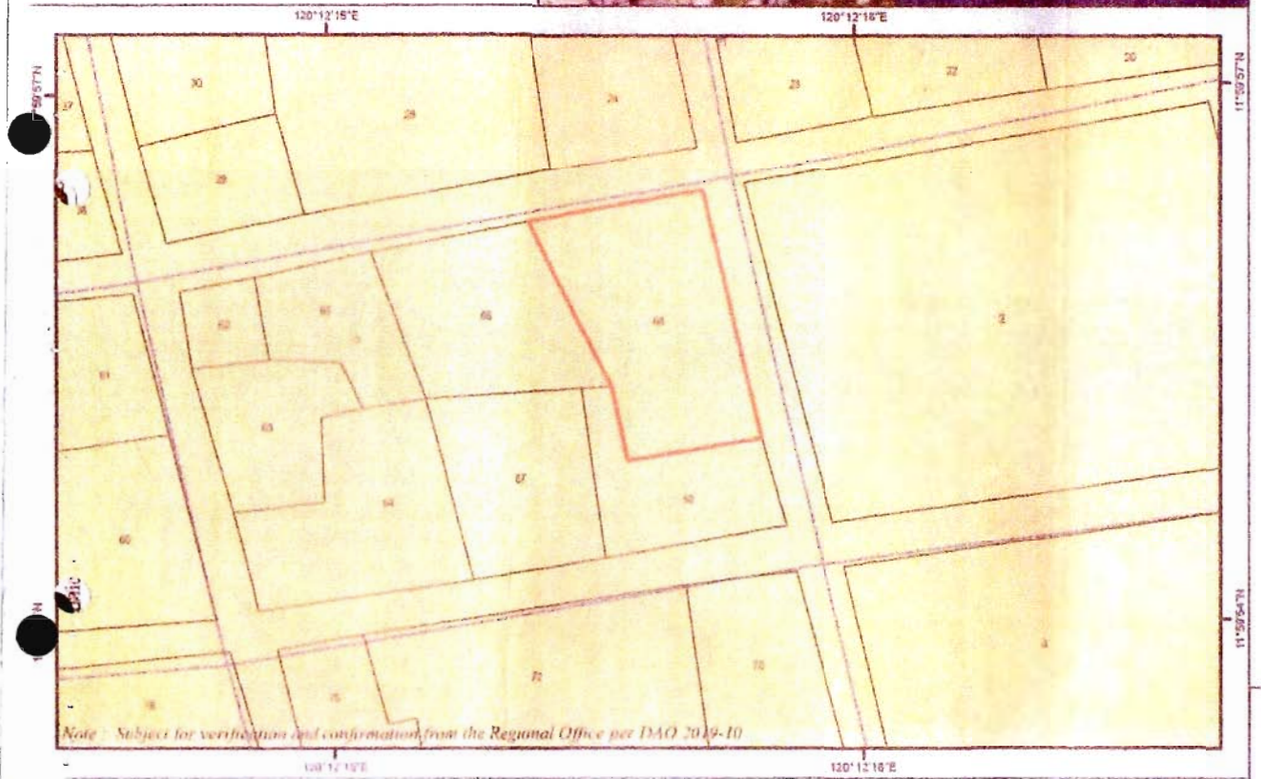

W E S

GIS MAP

showing the area requested for

STATUS OF LAND CLASSIFICATION

(Alienable and Disposable)

as per L.C. Map No. 127, Project 2
approved on November 23, 1933

as prepared for

LAURENTE SANDOVAL

Location

Barangay	Poblacion II
Municipality	: Coron
Province	: Palawan

Scale 1 : 1,000

0 5 10 20 30 40 Meters

Projection : Universal Transverse Mercator - Zone 50 (N)
Datum : World Geodetic System 1984 (WGS84)

Approx.Total Area based on GIS : 1,226 Square Meters

Legend

- CAD 33, Coron Cadastre, Palawan
- Lot 68, CAD 33, Coron Cadastre, Palawan
- Road

Land Classification

- Alienable & Disposable
- Forestland
- UPF

...ed by :

ARIFFA C. TUFIN II
Cartographer I

Checked and Verified by :

ARNEL D. CABANILLAS
Land Mgt. Officer II

Attested by :

JUDITH P. QUIRIT
Land Mgt. Officer III/ In-Charge, RPS

Republika ng Pilipinas
Lalawigan ng Palawan
Bayan ng Coron
BARANGAY BORAC

TANGGAPAN NG LUPONG TAGAPAMAYAPA

MARJORIE E. DADAYA

Complainant/s

- against –

EDMUND ECHAGUE
NERIA ECHAGUE
Respondent/s

Brgy. Case No. 17 Series 2022
For: Other Light Threats

CERTIFICATION TO FILE ACTION

This is to CERTIFY that:

1. There has been a personal confrontation between the parties before the Punong Barangay but mediation failed;

2. The Punong Barangay exerted all the efforts to settle the dispute between parties but the amicable settlement did not materialize.

3. Therefore, the corresponding complaint for the dispute may now be filed in court / government office;

This 25th day of October 2022, at Barangay Borac, Coron, Palawan.

SHARON D. BORROMEO
Barangay Secretary

ATTESTED:

NUMERIANO T. ECHAGUE
Punong Barangay

Republika ng Pilipinas
Lalawigan ng Palawan
Bayan ng Coron
BARANGAY BORAC

KATITIKAN MULA SA UNANG PAGHAHARAP SA PAGITAN NINA GNG. MARJORIE DADAYA LABAN KINA EDMUND ECHAGUE AT NERIA ECHAGUE NA GINANAP NOONG IKA – 17 NG OKTUBRE 2022, SA OPISINA NITONG BARANGAY.

Mga Dumalo:

1. Kgg. NUMERIANO T. ECHAGUE	Punong Barangay
2. Gng. Marjorie Dadaya	Complainant
3. G. Edmund Echague	Respondent/s
4. Gng. Neria Echague	Respondent/s

HINDI DUMALO: WALA

A. PAGTAWAG NG KAAYUSAN: Tinawag ang kaayusan ganap na ika – 1:30 ng hapon.
B. PAGTAWAG NG MGA PANGALAN: Sa pamagitan ng kalihim tinawag ang mga pangalan.

1. Sa paghaharap ng dalawang Panig , ipinaliwanag ng Punong Barangay sa magkabilang Panig ang pag-uusapan sa nito ay patungkol lamang sa dwelling of harassment sa nangyaring rambulan at naging sanhi ng pagkakaroon ng sugat sa paa ng Complainant na si Gng. Marjorie Dadaya. At dagdag pa na hindi pag-uusapan ang tungkol sa problema nito sa lupa sapagkat ang lupa ay hindi sakop ng barangay. Na kung saan ay idinidinig din ang kaso sa Pob.2 ng barangay.
2. Ayon pa sa kapitan na ang kasong isinampa nito sa barangay laban sa mga inirereklamo na trespassing ay hindi kasama sap ag-uusapan sapagkat ayon dito ay napapaloob parin ito sa lupa na kanilang pinag-aawayan.

3. Kung kaya't dahil dito ang complainant ay pumayag sa hiling ng kapitan.

4. Kung kaya't sinimulan ng paghaharap sa pamamagitan ng pagbasa ng complainant sa reklamo nito laban sa sa mga respondent/s na sina Edmund Echague at Neria Echague. At kasabay nito ang pagpapaliwanag sa naging papel nito kung bakit ipinaglalaban nito ang bahaging lupa na matatagpuan sa Barangay Pob. 2.

   At ayon sa reklamo nito ang isinagawang pagpasok ng mga hollowblocks ng mga respondents sa lugar ng walang abiso o respeto sa kanila at ayon dito ay nagulat na lamang siya dahil meron nang mga hollowblocks sa loob ng area nito at napag-alaman nito na pagmamay-ari nina G. Edmung Echague.

   Kasabay nito ay ang pagdemostrate ng complainant sa mga nangyari noong araw nang kaguluhan ng pagpasok nitong muli ng walang respite o abiso sa kanilang bakuran. Dagdag pa nito ang pagkukuha sa kanya ni Gng. Neria Echague ng litrato at vedio ng walang paalam sa kanya.

5. *Kaya't nagtanung ang Punong Barangay kung paano siya nagkaroon ng sukat sa* daliri ng paa nito, nagkaroon ba ito ng rambulan noong nangyari iyon ? at kung

Republika ng Pilipinas
Lalawigan ng Palawan
Bayan ng Coron
BARANGAY BORAC

KATITIKAN MULA SA IKALAWANG PAGHAHARAP SA PAGITAN NINA GNG. MARJORIE DADAYA LABAN KINA EDMUND ECHAGUE AT NERIA ECHAGUE NA GINANAP NOONG IKA – 24 NG OKTUBRE 2022, SA OPISINA NITONG BARANGAY.

Mga Dumalo:

1. Kgg. NUMERIANO T. ECHAGUE	Punong Barangay
2. Gng. Marjorie Dadaya	Complainant
3. G. Edmund Echague	Respondent/s
4. Gng. Neria Echague	Respondent/s

HINDI DUMALO: WALA

A. PAGTAWAG NG KAAYUSAN: Tinawag ang kaayusan ganap na ika – 1:30 ng hapon.

1. Nagkaroon ng pangalawang paghaharap ang magkabilang panig .
2. Ang Complainant ay nagdesisyon nang iindorso na lamang ang kaso sa mataas na tanggapan ng Pulisya o saang ahensya sapagkat batid nito na walang pagkakasundu na mangyayari sa pagitan nila ng respondents.
3. Kung kaya't ang mga respondents ay sinang-ayunan ang naging desisyon ng complainant na iindorso na ang kaso sa mataas na tanggapan .
4. At dahil dito agad nang tinapos ng Punong Barangay ang pag-uusap ng dalawang panig .

K. PAGTINDIG : Ganap na ika-1:40 ng hapon itinindig ang Paghaharap dito sa Tanggapan ng Punong Barangay.

PINATUTUNAYAN ko ang kawastohan nito paghaharap.

SHARON D. BORROMEO
Kalihim ng Barangay

PINATOTOHANAN:

KGG. NUMERIANO T. ECHAGUE
Punong Barangay

Versio WS-RPTAS 2012 1.07x5 TR CODE:GR Date/Time Printed: 11/6/2018 2:50:22 PM

TAX DECLARATION OF REAL PROPERTY

TD No.: 09-002-0330 Property Identification No.: 066-09-002-01-009

Owner: LAMENTE SANDOVAL and JOSEFA DACUNNON TIN:

Address: BARANGAY POB. II, CORON, PALAWAN Telephone No.:

Administrator/Beneficial User: TIN:

Address Telephone No."

Location of Property: CALLE BURGOS COR. NAT"L. ROAD, BRGY. II, CORON, PALAWAN

(Number and Street) (Barangay/District) (Municipality & Province/City)

OCT/TCT/CLOA No. OCT NO. 316 Survey No. CAD. 33

OCT Lot No. 68

Dated: Blk. No.

Boundaries: North: AL NO. 018, SEC. 07, BGY. POB. IV (NAT"L. ROAD) South: ASS. LOT NO. 011

East: AL NO 010 (CALLE BURGOS) West: ASS. LOT NO. 008, 011

Kind of Property Assessed

✔ LAND

BUILDING

No. of Storeys:

Brief Description:

Brief Description:

MACHINERY

Others:

Specify:

Classification	Area	Unit Value	Market Value	Actual Use	Adj. Market Value	Asst Level	Assessed Value	Taxability
COMMERCIAL LOT	1,226.00 sq m	2,220	2,721,720.00	COMMERCIAL	2,721,720.00	20 %	544,340.00	
TOTAL	1,226.00 Sq.m.				Php 2,721,720.00		Php 544,340.00	

Total Assessed Value FIVE HUNDRED FORTY FOUR THOUSAND THREE HUNDRED FORTY PESOS

(Amount in Words)

Taxable ✔ Exempt

Effectivity of Assessment/ Reassessment: 1 Qtr. 2019 Yr.

Approved By: Authority of the Provincial Assessor

REYNARIO R. LABRADOR
Municipal Assessor

11/6/2018
DATE

This declaration cancels TD No. Previous A.V. Php

Prev. PIN: Previous Owner: NEW Previous Area:

CO-OWNERS:

MEMORANDA:
SUBJECT PROPERTY WAS DECLARED TO HEREIN DECLARANT PER ORIGINAL CERTIFICATE OF TITLE NO. 316 ISSUED BY ROMAN DE JESU REGISTER OF DEEDS, PALAWAN. THIS PROPERTY WAS ALSO DECLARED IN THE NAME OF ALFONSO PAMADO UNDER TAX DECLARATION 002-0011-C.

BACKTAXES:

YEAR	MARKET VALUE	ASSESSED VALUE
2009-2011	P 2,268,100.00	P 453,620.00
2012-2018	2,721,720.00	544,340.00

Printed by: dodski Posted by: dodski

Notes: This declaration is for real property taxation purposes only and the valuation indicated herein are based on the schedule of unit market values prepared for the purpose and duly enacted into an Ordinance by the Sangguniang PANLALAWIGAN under Ordinance No. 1281-12 dated 11/5/2012. It does not and cannot by itself alone confer any ownership or legal title to the property. SWORN STATEMENT No. Date:12-11-2015

066-09-002-01-(009) B6

REA FORM NO. 1 002-0322-2 PROPERTY INDEX NO.

DECLARATION OF REAL PROPERTY

Description					Market Value
MARJORIE E. DADAYA			Barangay Poblacion V, Coron, Palawan		
Res. Bldg.	12 sq.m.	TIPS II-B(1)	1,910.00	G.I.	22,920.00

Total ₱ 22,920.00

DESCRIPTION AND OTHER PARTICULARS OF PROPERTY

National Highway Cor. Delle Burgos Barangay Pob. II Coron, Palawan

(009) B6

Res. House constructed in the lot of Alfonso Panadero under 01 Tax Declaration No. 002-0011-C with PIN No. 066-09-002-01-009 and Cad. lot No. 68 containing an area of 982 sq.m.

22,000.00
22,000.00

MARJORIE E. DADAYA

12th August 2015

Coron, Palawan

REYNARIO R. LABRADOR

Municipal Assessor

Kind of Property				
Bldg.	Res'l.	22,920.00	0	0

BY AUTHORITY OF THE PROV'L. ASSESSOR:

REYNARIO R. LABRADOR
Municipal Assessor

NERIE G. RODRIGUEZ

SAMUEL D. ALADON
Draftsman II
August 12, 2015

This declaration cancels NEW
Tax under this declaration becomes effective 2016
Entered in the Real Property Assessment Roll for 19
Previous owner

MEMORANDA: Subject property was declared to herein declarant per Sworn Statement dated 12th August, 2015 signed by Marjorie E. Dadaya and per actual ocular inspection conducted by this office.

066-09-002-01-(009) B6

RPA FORM NO.1 002-0322-I

PROPERTY INDEX NO.

DECLARATION OF REAL PROPERTY

Description: MARJORIE E. DADAYA Barangay Poblacion V, Coron, Palawan

Res. Bldg.	12 sq.m.	TIPE II-B(1)	1,910.00 G.I.	22,920.00

Total: 22,920.00

DESCRIPTION AND OTHER PARTICULARS OF PROPERTY

National Highway Corr. Calle Burgos Barangay Pob. II Coron, Palawan

(009) B6

Res. House constructed in the lot of Alfonso Pamaddunder 01
Tax Declaration No. 002-0011-C with PIN No. 066-09-002-01-009 and Cad. lot No. 68 containing an area of 982 sq.m.

22,000.00
22,000.00

MARJORIE E. DADAYA

12th August 2015 Coron, Palawan

REYNARIO R. LABRADOR

Municipal Assessor

Kind of Property				
Bldg.	Res'l.	22,920.00	0	0

ZONE

BY AUTHORITY OF THE PROV'L. ASSESSOR:

REYNARIO R. LABRADOR
Municipal Assessor

ASSESSOR'S FINDINGS

NERRIE G. RODRIGUEZ

SAMUEL D. ALABOON
Draftsman II
August 12, 2015

NEW

2016

MEMORANDA Subject property was declared to herein declarant per Sworn Statement dated 12th August, 2015 signed by Marjorie E. Dadaya and per actual coular inspection conducted by this office.

TC: DC

TAX DECLARATION OF REAL PROPERTY

T D. No.: 18-09-002-0256 Property Identification No.: 066-09-002-01-009-.

Owner: SPS. LAMENTE SANDOVAL AND JOSEFA DACUNNON TIN:

Address: BARANGAY POBLACION II, CORON, PALAWAN Telephone No.:

Administrator/Beneficial User: TIN:

Address: Telephone No.:

Location of Property: BARANGAY POBLACION II CORON, PALAWAN

(Number and Street) (Barangay/District) (Municipality & Province)

OCT/TCT/CLOA No. OCT NO. 316 Survey No.

CCT: Lot No. 88

Date: 10-04-1917 Block No.

Boundaries: North: BGY. POB. IV South: ALN 011

East: ALN 010 West: ALN 008 & 011

KIND OF PROPERTY ASSESSED:

☑ LAND

☐ BUILDING
No. of Storeys:
Brief Description:

☐ MACHINERY
Brief Description:

☐ Others:
Specify:

Classification	Area	Unit Value	Market Value	Actual Use	Assessment Level	Assessed Value	Taxability
COMMERCIAL (C-2)	1,226.00 sq.m	4,600 Php	5,639,600.00	COMMERCIAL	20 %	Php 1,127,920.00	TAXABI
Total	1,226.00 sq.m	Php	5,639,600.00			Php 1,127,920.00	

Total Assessed Value ONE MILLION ONE HUNDRED TWENTY-SEVEN THOUSAND NINE HUNDRED TWENTY PESOS

(Amount in Words)

Taxable ☑ Exempt ☐ Effectivity of Assessment/Reassessment: 2020 YEAR

Approved by:

ELVICA M. COLBE, REA
PROVINCIAL ASSESSOR

4/15/2019
Date

This declaration cancels TD No. NEW Previous A.V. Php. 0.00 Previous PIN: NONE

Previous Owner: NONE Previous Area: 0 sq.m.

Memoranda:

DECLARED PER OCT NO. 316 ISSUED ON OCTOBER 04, 1917 SWORN STATEMENT FILED. LATE FILING OF SS: P5,000.00, O.R. NO. 1186328, ISSUED ON APRIL 15, 2 AT PUERTO PRINCESA CITY. SUBJECT TO TEN (10) YEARS BACK TAXES BASED ON THE ASSESSED VALUE SHOWN BELOW. NO PENALTY IF PAID ON OR BEFORE SEPTEMBER 30, 2019.

Assessed Value subject to tax:

Year Covered	Assessed Value
2010-2013	306,500.00
2014-2018	387,800.00
2019	1,127,920.00

Note: This declaration is for real property taxation purposes only and the valuation indicated herein are based on the schedule of unit market values prepared f the purpose and duly enacted into an Ordinance by the Sangguniang Panlalawigan under Ordinance No. 1914-2018 dated March 26, 2018. It does not and cannot by itself alone confer any ownership or legal title to the property.

SWORN STATEMENT No.: 069-09-551
SWORN STATEMENT Date: 04-15-2019

Machine Validation: Printed by Karean M. Gabayan/ 4:25:18 PM

Accountable Form No. 56
(Revised 1992)
Change: 243.00

Previous Tax Receipt No. 0000/0000 dated _____ for the year 20 _____

OFFICIAL RECEIPT OF THE REPUBLIC OF THE PHILIPPINES

Provincial or City Treasurer's Real Property Tax Receipt

№ 0303129 Y

(ORIGINAL)

Municipality/Province: CORON, PALAWAN | City: | Date: September 30, 2013

Received from MARJORIE DADAYA, JEFFREY ECHAGUE, REDEMPTO ECHAGUE the sum of Twelve Thousand Two Hundred Sixty Pesos Only , 20 12,260.00 pesos (₱ _____)
Philippine Currency, in full or as installment payment of REAL PROPERTY TAX for the Calendar Year 20 _____ upon property described in the Assessment Rolls as follows: ☐ Basic Tax ☐ Special Education Fund

Name of Declared Owner	Location Number and Street or Barangay	Lot and Block Number	Tax Declaration Number	Assessed Value			Tax Due	Installment*		Full Payment	Penalty Per Cent	Total
				Land	Improvement	Total		No.	Payment			
SPS. LAMENTE SANDOVAL AND JOSEFA DACUNNON	BARANGAY	POBLACION	13-09-002-0286		PE	306,300.00	1 - 2010 | 4 - 2011		12,260.00	.00	(.00)	12,260.00
									TOTAL:			12,260.00

Total taxes paid by Money Order, Treasury Warrant or Check No. _____ dated _____, 20 _____

* Payment without penalty may be made within the periods stated below if by installment:

1st Installment – January 1 to March 31, of the year
2nd Installment – April 1 to June 30, of the year
3rd Installment – July 1 to Sept. 30, of the year
4th Installment – October 1 to Dec. 31, of the year

ELINO P. MONDRAGON
Provincial Treasurer
Provincial or City Treasurer

ANN / 09/30/13 14:23:03:737

Annabel K. Rodriguez
Deputy

ACCOUNTABLE FORM No. 56
(Revised 1992)

Previous Tax Receipt No. _____ dated 00/00/0000 for the year 20____

Change: 00
(ORIGINAL)

OFFICIAL RECEIPT OF THE REPUBLIC OF THE PHILIPPINES

Provincial or City Treasurer's Real Property Tax Receipt

№ 5675436 Y

MUNICIPALITY/PROVINCE: CORON/PALAWAN

CITY:

DATE: October 10, 2022, 20

Received from LAURENTE B. TAN the sum of ~~Eighteen Thousand Forty-Six Pesos & Seventy~~ Two Centavos Only pesos (₱ 18,046.72) Philippine Currency, in full or as installment payment of REAL PROPERTY TAX for the Calendar Year 20 2022 upon property described in the Assessment Rolls as follows:

☐ Basic Tax ☐ Special Education Fund

NAME OF DECLARED OWNER	LOCATION NUMBER AND STREET OR BARANGAY	LOT AND BLOCK NUMBER	TAX DECLARATION NUMBER	ASSESSED VALUE			TAX DUE	INSTALLMENT*		FULL PAYMENT	PENALTY PER CENT	TOTAL
				LAND	IMPROV'NT	TOTAL		No.	PAYMENT			
SPS. LAMENTE JOSEFA DACULANDAN	SANDOVAL AND	POBLACION II	18-09-002-0256	ADV	1,127,920.00	1-2023/4-2023	22,558.40			.00	(4,511.68)	18,046.72
									TOTAL:			18,046.72

Total taxes paid by Money Order, Treasury Warrant or Check No. _____ dated _____, 20____

* Payment without penalty may be made within the periods stated below if by installment:

1st Installment – January 1 to March 31, of the year
2nd Installment – April 1 to June 30, of the year
3rd Installment – July 1 to Sept. 30, of the year
4th Installment – October 1 to Dec. 31, of the year

GOLDA/10/10/22 13:49:09:011

GOLDA H. ARBOLEDA

ELINO P. MONDRAGON
Provincial or City Treasurer

IDREW VICENTE L. GARCELLAI
Acting Municipal Treasurer

NBC FORM NO. B-03

Republic of the Philippines
Municipality of Coron
Province of Palawan
OFFICE OF THE BUILDING OFFICIAL

FENCING PERMIT

APPLICATION NO. | FP NO. FN04032210000 5 | BUILDING PERMIT NO.

BOX 1 (TO BE ACCOMPLISHED BY THE OWNER/APPLICANT)

OWNER/APPLICANT LAST NAME	FIRST NAME	M.I.	TIN.
ECHAGUE	ERIC	O	

FOR CONSTRUCTION OWNED BY AN ENTERPRISE | FORM OF OWNERSHIP

ADDRESS NO., STREET, BARANGAY, CITY/MUNICIPALITY, ZIP CODE, TELEPHONE NO.: BGY. BORAC, CORON, PAL. 5316

LOCATION OF CONSTRUCTION: LOT NO. 48-0 BLK. NO. ____ TCT. NO. OCT. 314 TAX DEC. NO. C02-0011-C

STREET NATIONAL HIGHWAY COR. CALO BURGOS BARANGAY POB. 2 CITY/MUNICIPALITY OF CORON

SCOPE OF WORK

- [x] NEW CONSTRUCTION
- [ ] ERECTION
- [ ] ADDITION
- [ ] REPAIR
- [ ] DEMOLITION
- [ ] OTHERS (Specify)

BOX 2

DESIGN PROFESSIONAL, PLANS AND SPECIFICATIONS

VILMA G. GALANO
ARCHITECT OR CIVIL ENGINEER (Signed and Sealed Over Printed Name) Date ____

Address
PRC No. 0180071 Validity 12/07/24
PTR No. 2493112 Date Issued 6/29/22
Issued at CORON, PALAWAN TIN

BOX 3

FULL-TIME INSPECTOR AND SUPERVISOR OF CONSTRUCTION WORKS

ARCHITECT OR CIVIL ENGINEER (Signed and Sealed Over Printed Name) Date ____

Address
PRC No. Validity
PTR No. Date Issued
Issued at TIN

BOX 4 (TO BE ACCOMPLISHED BY THE APPLICANT)

APPLICANT:	WITH MY CONSENT: LOT OWNER
ERIC O. ECHAGUE	ERIC O. ECHAGUE
(Signature Over Printed Name)	(Signature Over Printed Name)
Date:	Date:
Address BGY. BORAC, COR. PAL.	Address BGY. BORAC, COR. PAL.
CTC No. 10626939 Date Issued 10/14/2022 Place Issued COR. PAL	CTC No. 10626939 Date Issued 10/14/22 Place Issued COR. PAL.

BOX 5

REPUBLIC OF THE PHILIPPINES
CITY/MUNICIPALITY OF CORON, PALAWAN S.S.

BEFORE ME, at the City/Municipality of CORON, PALAWAN on OCT 20 2022 personally appeared the following:

APPLICANT	CTC No.	Date Issued	Place Issued
ERIC O. ECHAGUE	10626939	10/14/2022	COR. PAL.

LICENSED ARCHITECT OR CIVIL ENGINEER (Full-Time Inspector and Supervisor of Fencing Works)	CTC No.	Date Issued	Place Issued

whose signatures appear herein above, known to me the same persons who executed this [illegible] the same is their free and voluntarily act and deed.

WITNESS MY HAND AND SEAL on the date and place above written.

ATTY. ALBERT C. CARRAEZ
Notary Public for the Province
of Palawan
Roll No. 57527
IBP Lifetime Member No. 012852
PTR No. 1001438 April 1, 2022
Edgetech Building, National Highway,
Barangay IV, Coron, Palawan
Valid until December 31, 2023

Doc. No. 452
Page No. 48
Book No. 85
Series No. 2022

CamScanner

REPUBLIC OF THE PHILIPPINES
PROVINCE OF PALAWAN
MUNICIPALITY OF CORON
BARANGAY POBLACION 2

OFFICE OF THE PUNONG BARANGAY

CERTIFICATION

TO WHOM IT MAY CONCERN:

This is to certify that the bearer **MR. ERIC O. ECHAGUE,** of legal age, with residence address at Barangay Poblacion 2, Coron, Palawan, has acquired a parcel of land situated to this Barangay Under **TCT No. Oct.316 and Tax Dec. No. 002-0011-c** (Xerox copy of said Tax Dec. No. and TCT No. is hereto attached).

This certification issued upon request of subject person for issuance of **FENCING PERMIT.**

Given this 4th day of October, 2022 at Barangay Poblacion 2, Coron, Palawan.

OSCAR A. AMIT JR
Punong Barangay

CamScanner

Republic of the Philippines
Province of Palawan
MUNICIPALITY OF CORON
OFFICE OF THE MUNICIPAL PLANNING & DEV'T. COORDINATOR

LOCATIONAL CLEARANCE

Application No. 197-2022	Decision No.: 196-2022
Date of Receipt: October 12, 2022	Date Issued: October 12, 2022
Paid Under OR NO. 2551104 & 2551028	Locational Clearance Fee: P/1,650.00

Name of Applicant Eric O. Echague	Name of Corporation:	
Address/Mobile/Landline No. of Applicant Barangay Borac, Coron, Palawan / 0974-445-0004	Address/Telephone No. of Corporation:	
Name/Type of Project Proposed Concrete Perimeter Fence	Project Location: Barangay Poblacion 2, Coron, Palawan	
Right Over Land Authorized to use the land	Land 132 sq. meters	Fence 50.06 meters

Evaluation of Facts
Site Development Plan, Original Certificate of Title (OCT-316), Extrajudicial Settlement of Estate of the Late Spouses Lamente Sandoval and Josefa Dacunnon by Heirs, Barangay Clearance, Electrical Plan, Estimated Cost and Fully Accomplished Application.

APPROVED: Proposed Concrete Perimeter Fence
Provision of Proper Waste Management and Disposal

CONDITIONS

[/] All conditions stipulated herein form part of this decision and are subject to monitoring.
[/] Non-compliance therein shall be a cause for cancellation or legal action.
[/] The applicable requirement of other government agencies and applicable provisions of existing laws shall be complied with.
[/] No activity other than that applied for and granted shall be conducted within the project site
[/] No major expansion, alteration and/or improvement shall be introduced without prior clearance from the office
[/] This decision shall not be construed as a Certification of Ownership over the parcel(s) of land subject of this decision.
[/] Any misinterpretation, false statement or allegation material to the issuance of this decision shall be sufficient cause for its revocation
[/] Additional Conditions.
[/] Provision as to setback, yard requirements, bulk, easement, area, height and other restrictions shall strictly conform to the requirements of the national building Code of the Philippines and other related laws
[/] This decision shall be considered automatically revoked if project is not commenced within one (1) year from the date of issue of this decision.

Approved by:

ENP/ENGR. MICHAEL ADRIAN F. FABABEIR, MPA, MAURP
MPDC
ACTING ZONING ADMINISTRATOR

CamScanner

ORIGINAL CERTIFICATE OF TITI

CERTIFICADO ORIGINAL DE TITULO

No. ...

OFFICE OF THE REGISTER OF DEEDS FOR THE PROVINCE OF PALAWAN

OFICINA DEL REGISTRADOR DE TITULOS DE LA PROVINCIA DE

Entered pursuant to the following Decree:

Decree No. 575.38

United States of America

Philippine Islands

Court of First Instance, Province of PALAWAN

"...Cadastral... *Case No.* ..., *G. L. R. O.* ...Cadastral... *Record No.* ...23..., *having been duly and regularly heard, in a* *with the provisions of law, it is hereby decreed that* the conjugal partnership of the spouses, Lorenzo Sandoval and Josefa Dacumon, ... of Coron, Province of Palawan, P.I. ... the owner... in fee simple of certain land situated in said Province... PALAWAN ..., *more particularly bounded and described as follows:* A parcel of land (Lot No. 66 of the Cadastral Survey of Coron) with the improvements thereon, situated in the Township of ... Bounded on the NE. by Calle Burgos; on the SE. by lot 69; on the SW. by lots Nos. 65 and 68; and on the NW. by Calle San Jo... beginning at a point marked "1" on plan, being N. 64 deg. W., 144.68 m. from a B.L.L. ... 78 deg. ... point "2" thence N. 11 deg. 22' W., 45.30 m. to point "3"; thence S. 79 deg. 4' W., 31.92 m. to point "4"; thence S. 25 deg. ... 82.37 m. to point "5"; thence S. 8 deg. 27' E., 14.77 m. to the point of beginning; containing an area of one thousand two hundred twenty-six square meters (1226), more or less. All bearings referred to are indicated on the plan, bearings true; declination 1 ... Date of survey, January 3 to January 25, 1913.

(DESCRIPTION CONTINUED ON THE REVERSE SIDE—DESCRIPCION CONTINUADA AL DORSO)

"Therefore, it is ordered by the Court that said land be registered in accordance with the provisions of the Land Registration Act in the said conjugal partnership of the spouses, Lorenzo Sandoval and Josefa Dacumon.

subject, however, to such of the incumbrances mentioned in article ... of said Law as may be subsisting, and to a first lien in favor of the Philippine Government to guarantee the payment of the special taxes assessed pursuant to the provisions of Sec. 16 of Act 2259.

Control No. ...

CERTIFICATION

I do certify that this is a true copy of OCT/TCT/CCT No. 316 ... registered in the ... consisting ... and the ... Book ... Page ... Date ... Vault No. ...

ATTY. ANTONIETTA ... Registrar of Deeds

O.R. No. ...

SEAL OF THE COURT SELLO DE JUSTICIA

"Witness the Honorable Bartolome Sorilla, *Judge of said* ... *the* 8th *day of* April, *A. D. nineteen hundred and* seventeen.

"Issued at Manila, P. I., the 10th *day of* October, *A. D.* ... *at* 9:25 a.m.

ATTEST: ... *Chief of the General Land Registration Office*

Received for transcription at the office of the Register of Deeds for the Province of Palawan *this* 21 *day of* April, *nineteen hundred and* seventy-two ... *at* ... *M.*

Registrar of Deeds

PLAN

OF

SUBDIVISION SURVEY MADE FOR

SILAMENTE SANDOVAL AND JOSEFA DACUINION

OF LOT 68, Cad-33, CORON CADASTRE

DESCRIBED IN OCT No. 316

ISSUED IN FAVOR OF

SILAMENTE SANDOVAL AND JOSEFA DACUINION

SITUATED IN THE

BURBAN CODE : 136393

BARRIO/SITIO OF : POBLACION 2

MUN. / CITY OF : CORON

PROVINCE OF : PALAWAN

ISLAND OF : BUSUANGA

CONTAINING AN AREA OF 1,228 / 50 M

BEARINGS TRUE BRG. 1° 16'E

SCALE 1 : 200

SURVEYED FROM 6, 1918

GEODETIC ENGINEER

ORIGINAL SURVEY JUNE 9 - JUNE 16, 1918

Department of Justice

LAND REGISTRATION AUTHORITY

17 DEC 2020

(LRA) Psd - E2019001899

CALLE SAN JOSE

CALLE BURGOS

LOT 68-A A = 176.50 M

LOT 68-B A = 101.50 M

LOT 68-C A = 66.50 M

LOT 68-D A = 66.50 M

LOT 68-E A = 43.50 M

LOT 68-F A = 33.50 M

LOT 68-G A = 33.50 M

LOT 68-H A = 33.50 M

LOT 68-I A = 33.50 M

LOT 68-J A = 33.50 M

LOT 68-K A = 50.50 M

LOT 68-L A = 50 M

LOT 68-M A = 50 M

LOT 68-N A = 144.50 M

LOT 68-O A = 132.50 M

LOT 68-P A = 65.50 M

LOT 69, Cad-33, CORON CADASTRE

LOT 68, Cad-33, CORON CADASTRE

LOT 68, Cad-33, CORON CADASTRE

LOT 68-L

1-2	S 11° 22' E	3.61 M.
2-3	S 79° 49' W	8.57 M.
3-4	N 79° 49' W	3.61 M.
4-1	N 79° 51' E	8.84 M.

LOT 68-M

1-2	S 11° 22' E	4.78 M.
2-3	S 79° 51' W	9.94 M.
3-4	N 33° 28' W	4.97 M.
4-1	N 79° 50' E	11.13 M.

LOT 68-N

1-2	S 79° 50' W	11.13 M.
2-3	N 33° 28' W	3.90 M.
3-4	N 79° 47' E	8.03 M.
4-5	N 33° 28' W	17.00 M.
5-6	N 79° 47' E	8.18 M.
6-1	S 11° 22' E	20.18 M.

LOT 68-O

1-2	N 79° 47' E	8.03 M.
2-3	S 33° 28' E	17.00 M.
3-4	S 79° 47' W	8.03 M.
4-1	N 33° 28' W	17.00 M.

LOT 68-P (PUBO)

1-2	N 11° 22' W	3.61 M.
2-3	N 11° 22' W	3.61 M.
3-4	N 11° 22' W	4.78 M.
4-5	N 11° 22' W	20.18 M.
5-6	N 79° 47' E	3.01 M.
6-7	S 11° 22' E	12.83 M.
7-8	S 11° 22' E	7.60 M.
8-9	S 11° 22' E	6.23 M.
9-10	S 11° 22' E	6.23 M.
10-11	S 11° 21' E	3.30 M.
11-12	S 79° 48' W	0.76 M.
12-13	S 10° 13' E	4.72 M.
13-14	S 79° 47' W	0.44 M.
14-15	S 10° 13' E	4.76 M.
15-16	S 79° 09' W	1.13 M.
16-1	N 11° 22' W	9.50 M.

The line from BLLM # 1, Cad-33, CORON CADASTRE to Corner Marked "1"

LOT NO.	BEARINGS	DISTANCES
DOTTY	N 64° 10' W	8.94 M.
68-A	N 49° 18' W	249.84 M.
68-B	N 49° 58' W	145.81 M.
68-C	N 81° 59' W	133.11 M.
68-D	N 81° 59' W	160.19 M.
68-E	N 81° 11' W	137.06 M.
68-F	N 81° 11' W	182.00 M.
68-G	N 64° 59' W	133.19 M.
68-H	N 81° 11' W	197.99 M.
68-I	N 64° 14' W	181.95 M.
68-J	N 81° 34' W	143.68 M.
68-K	N 81° 34' W	148.66 M.
68-L	N 81° 11' W	181.98 M.
68-M	N 84° 07' W	156.78 M.
68-N	N 84° 05' W	144.78 M.
68-O	N 84° 10' W	156.81 M.
68-P	N 87° 34' W	188.60 M.

This is to certify that I JIMMY D. TIGAS JR. Professional Engineer, have prepared the plan (LRA) PSD-E2019001899 and found the same to be in order and that I S.A. PINSON Field Examiner, have verified this plan and found that the same is to be in order.

CERTIFICATION

JIMMY D. TIGAS JR.

Professional Engineer

Date 12-7-20

SHANE ALEXANDER PINSON

Field Examiner

Date 11-17-20

(LRA) Psd 8209-001899

VERIFICATION FEE

AMOUNT P 661.86

Official Receipt No. 6278853349

Date : 9-5-20 19

Cashier

DETAILED ESTIMATE

Project : Temporary Fence
Subject : Detailed Estimate
Area : 132.00 sq.m.

Quantity	Unit	PARTICULARS	Unit Cost	Labor Cost	AMOUNT
I. Earthworks					
a. Clearing and Grubbing					
1.00	ls	Clearing and Grubbing Works	10,000.00		10,000.00
		Subtotal a		*3,000.00*	*10,000.00*
b. Excavation					
1.00	ls	Excavation Works	10,000.00		10,000.00
		Subtotal b		*3,000.00*	*10,000.00*
SUMMARY OF COST					
		Material and Labor Cost	*26,000.00*		
		Indirect Cost			
		HANDLING COST	1,000.00		
		OCM	1,300.00		
		VAT	3,120.00		
		TOTAL PROJECT COST I	**31,420.00**		
II. Fencing					
a. Concrete Post					
5.00	cu.m	Gravel	1,500.00		7,500.00
2.50	cu.m	Sand	1,500.00		3,750.00
50.00	bags	cement	285.00		14,250.00
70.00	pcs	10mm RSB	180.00		12,600.00
8.00	pcs	G.I. Pipe 3" dia	3,100.00		24,800.00
22.00	pcs	G.I. Pipe 2" dia	2,800.00		61,600.00
3.00	rolls	Cyclone Wire 2"	2,500.00		7,500.00
5.00	kgs	Tie Wire #16	100.00		500.00
5.00	pcs	Ord.Marine Plywood	950.00		4,750.00
400.00	pcs	CHB #6	17.00		6,800.00
		Subtotal a		*43,215.00*	*144,050.00*
SUMMARY OF COST					
		Material and Labor Cost	*187,265.00*		
		Indirect Cost			
		HANDLING COST	7,202.50		
		OCM	9,363.25		
		VAT	22,471.80		
		TOTAL PROJECT COST II	**226,302.55**		
GRAND TOTAL PROJECT COST					
(I+II) in figures			**257,722.55**		
GRAND TOTAL PROJECT COST (I+II) in words			Two Hundred Fifty Seven Thousand Seven Hundred Twenty Two and 55/100.		

Prepared by:

Ram Cliffe U. Zamora
CIVIL ENGINEER

CamScanner

SUMMARY OF DETAILED ESTIMATE

'roject : Temporary Fence
ubject : Summary of Detailed Estimate
\rea : 132.00 sq.m.

TEM	SCOPE OF WORKS	DIRECT COST		INDIRECT COST	TOTAL
		Materials	Labor	(OCM,Handling Cost & VAT)	(Direct + Indirect Cost)
I	Earthworks	20,000.00	6,000.00	5,420.00	31,420.00
II	Fencing	144,050.00	43,215.00	39,037.55	226,302.55
				GRAND TOTAL:	257,722.55

Prepared by:

Ram Cliffe V. [illegible]
CIVIL ENGINEER

CamScanner

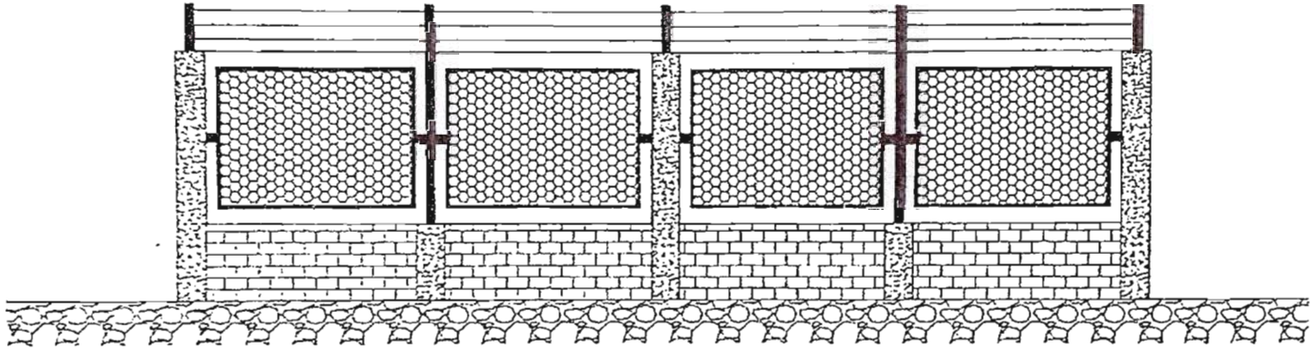

ELEVATION

SCALE: NTS

PAM CLIFFE	PROPOSED TEMPORARY FENCE	ERIC O. ECHAGUE	AS SHOWN	1

CamScanner

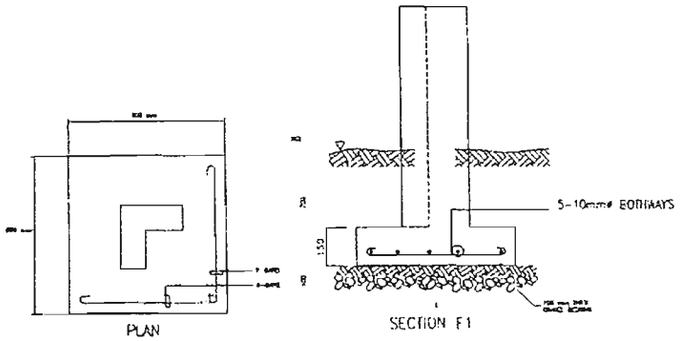

TYP. FOOTING DETAIL
SCALE NTS

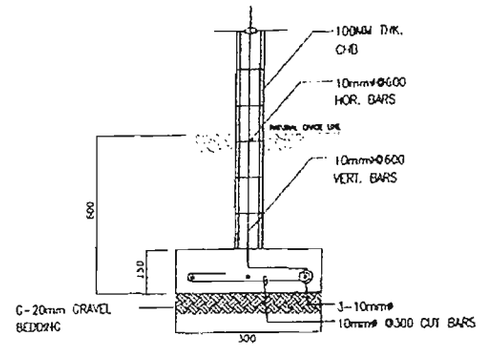

DETAIL OF WF
SCALE : NTS

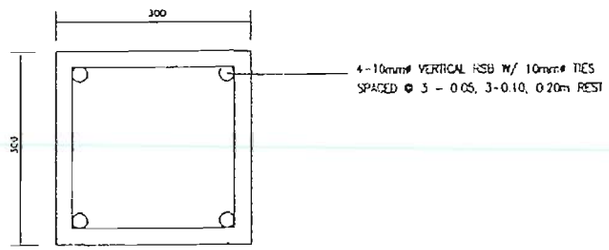

TYP. COLUMN DETAIL
SCALE : NTS

DESIGNED BY	PROJECT TITLE	PROJECT OWNER	SHEET CONTENT	SHEET No.
RAM CLIFFORD CAMPOMANES CIVIL ENGINEER	PROPOSED TEMPORARY FENCE	ERIC O. ECHAGUE	AS SHOWN	2
	LOCATION: BGY. POB 2, CORON, PALAWAN	LOCATION: BGY. BORAC, CORON, PALAWAN		

CamScanner

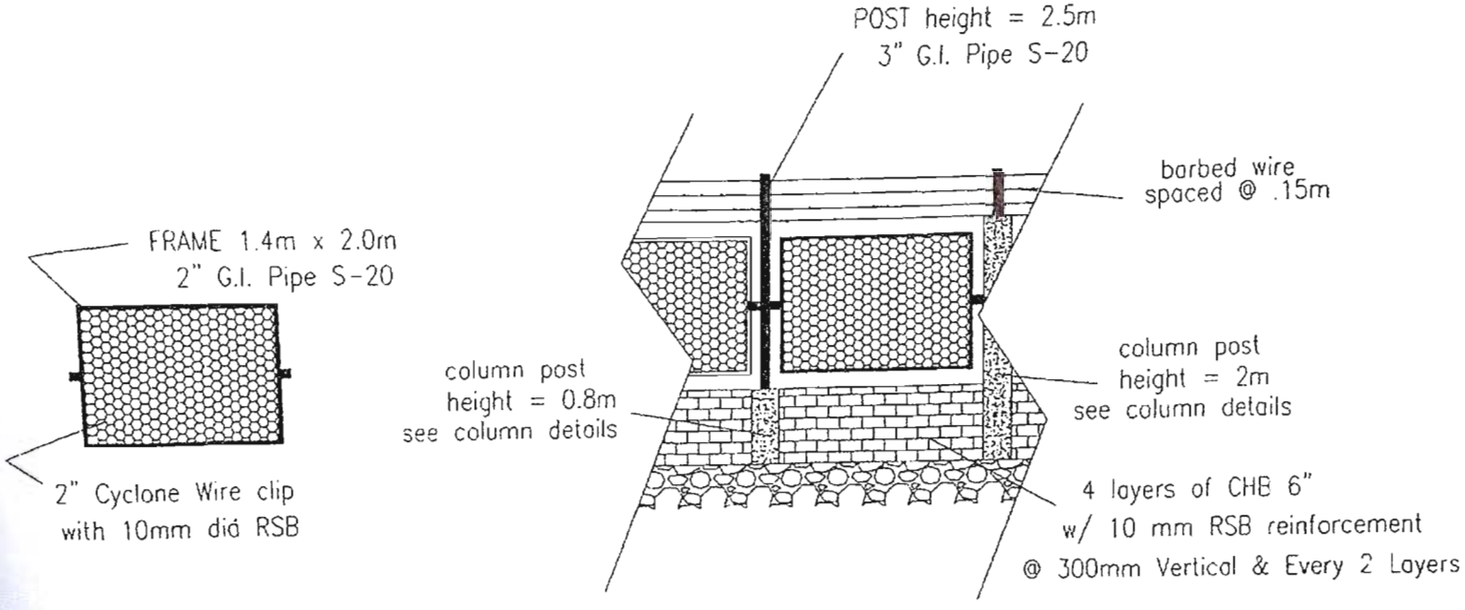

DETAILS OF FENCE

SCALE: NTS

(Note : All G.I. Pipe Connections are all in Full Weld)

RAM CLIFFE L. PATAGANOBY	PROPOSED TEMPORARY FENCE	ERIC O. ECHAGUE	AS SHOWN	3
	LOCATION: BRGY. POBLACION, CORON, PALAWAN	LOCATION: BRGY. HORAC, CORON, PALAWAN		

CamScanner

TECHNICAL DESCRIPTION

LINES	BEARINGS	DISTANCES
68		
1-2	N 08° 27' W	14.77M.
2-3	N 25° 26' W	32.37M.
3-4	N 79° 47' E	31.92M.
4-5	S 11° 22' E	45.30M.
5-1	S 78° 09' W	24.80M.
LOT 68-A		
1-2	S 79° 47' W	13.70M.
2-3	N 11° 22' W	12.85M.
3-4	N 79° 47' E	13.70M.
4-1	S 11° 22' E	12.85M.
LOT 68-B		
1-2	S 11° 22' E	7.60M.
2-3	S 79° 47' W	13.70M.
3-4	N 11° 22' W	7.60M.
4-1	N 79° 47' E	13.70M.
LOT 68-C		
1-2	S 79° 47' W	13.70M.
2-3	N 11° 22' W	6.25M.
3-4	N 79° 47' E	13.70M.
4-1	S 11° 22' E	6.25M.
LOT 68-D		
1-2	S 11° 22' E	6.25M.
2-3	S 79° 47' W	13.70M.
3-4	N 11° 22' W	6.25M.
4-1	N 79° 47' E	13.70M.
LOT 68-E		
1-2	S 79° 47' W	6.73M.
2-3	N 11° 22' W	3.30M.
3-4	N 79° 47' E	13.70M.
4-5	S 10° 13' E	8.30M.
5-1	S 79° 47' W	6.91M.
LOT 68-F		
1-2	N 79° 47' E	6.91M.
2-3	S 12° 10' E	4.72M.
3-4	S 79° 47' W	7.07M.
4-1	N 10° 13' W	4.72M.
LOT 68-G		
1-2	N 10° 13' W	4.54M.
2-3	N 79° 47' E	0.32M.
3-4	N 79° 47' E	7.07M.
4-5	S 11° 22' E	4.33M.
5-1	S 78° 09' W	7.49M.
LOT 68-H		
1-2	S 10° 13' E	4.72M.
2-3	S 79° 47' W	0.32M.
3-4	S 79° 47' W	6.67M.
4-5	N 10° 13' W	4.72M.
5-6	N 79° 47' E	0.26M.
6-1	N 79° 47' E	6.73M.
LOT 68-I		
1-2	S 78° 09' W	7.11M.
2-3	N 10° 13' W	4.75M.
3-4	N 79° 47' E	0.44M.
4-5	N 79° 47' E	6.67M.
5-1	S 10° 13' E	4.54M.
LOT 68-J		
1-2	N 79° 47' E	1.75M.
2-3	S 10° 13' E	4.72M.
3-4	S 79° 47' W	0.44M.
4-5	S 10° 13' E	4.75M.
5-6	S 78° 09' W	10.21M.
6-7	N 08° 27' W	9.76M.
7-1	N 79° 47' E	8.59M.
Lot 68-K		
1-2	S 79° 47' W	8.59M.
2-3	N 08° 27' W	5.01M.
3-4	N 25° 26' W	0.94M.
4-5	N 79° 47' E	8.56M.
5-1	S 11° 22' E	5.91M.
Lot 68-L		
1-2	S 11° 22' E	5.41M.
2-3	S 79° 47' W	8.56M.
3-4	N 25° 26' W	5.61M.
4-1	N 79° 47' E	9.93M.
Lot 68-M		
1-2	S 11° 22' E	4.75M.
2-3	S 79° 47' W	9.93M.
3-4	N 25° 26' W	4.92M.
4-1	N 79° 47' E	11.12M.
Lot 68-N		
1-2	S 79° 47' W	11.12M.
2-3	N 25° 26' W	3.90M.
3-4	N 79° 47' E	8.03M.
4-5	N 25° 26' W	17.00M.
5-6	N 79° 47' E	8.18M.
6-1	S 11° 22' E	20.18M.
Lot 68-O		
1-2	N 79° 47' E	8.03M.
2-3	S 25° 26' E	17.00M.
3-4	S 79° 47' W	8.03M.
4-1	N 25° 26' W	17.00M.
Lot 68-P		
1-2	N 11° 22' W	5.91M.
2-3	N 11° 22' W	5.41M.
3-4	N 11° 22' W	4.75M.
4-5	N 11° 22' W	20.16M.
5-6	N 79° 47' E	2.01M.
6-7	S 11° 22' E	12.85M.
7-8	S 11° 22' E	7.60M.
8-9	S 11° 22' E	6.25M.
9-10	S 11° 22' E	6.25M.
10-11	S 11° 22' E	3.30M.
11-12	S 79° 47' W	0.26M.
12-1	S 79° 47' W	1.75M.

Tie lines from BLLM #1, CAD 33, CORON CADASTRE, CORON, PALAWAN to Corner Marked "1":

LOT NO.	BEARINGS	DISTANCES
BDRY	N 64° 48' W	144.60M.
68-A	N 48° 55' W	149.86M.
68-B	N 48° 55' W	149.86M.
68-C	N 52° 24' W	139.14M.
68-D	N 52° 24' W	139.14M.
68-E	N 57° 11' W	137.09M.
68-F	N 57° 11' W	137.09M.
68-G	N 60° 14' W	131.20M.
68-H	N 57° 11' W	137.09M.
68-I	N 60° 14' W	131.20M.
68-J	N 59° 34' W	143.61M.
68-K	N 59° 34' W	143.61M.
68-L	N 56° 22' W	151.39M.
68-M	N 55° 08' W	154.79M.
68-N	N 55° 08' W	154.79M.
68-O	N 54° 22' W	150.91M.
68-P	N 59° 34' W	143.61M.

CamScanner

Republic of the Philippines
Province of Palawan
Municipality of Coron
Barangay Poblacion 2

OFFICE OF THE PUNONG BARANGAY

CERTIFICATION

TO WHOM IT MAY CONCERN:

THIS IS TO CERTIFY that **RAFAELA TAN ECHAGUE** (deceased) ,represented by her heir ,**ERIC O. ECHAGUE**, of legal age, married , one of the heirs of SPOUSES LAMENTE SANDOVAL (deceased) and JOSEFA DACUNNON (deceased) , known to be the absolute owner of a certain area with Original Certificate of Title No. 316 and land area of one thousand two hundred twenty six (1,226 sq.mtrs.) square meters located at Barangay Poblacion 2, in this barangay.

CERTIFIES FURTHER , that **RAFAELA TAN ECHAGUE** owned and assigned to her a portion of lot from a parcel of land mentioned above with **lot no, 68-O** measuring an area of **132 square meters** , based on a duly notarized Extra Judicial Settlement of the State of the late Spouses Lamente Sandoval and Josefa Dacunnon by the Heirs , and the Subdivision Plan of Land is hereto attached.

This CERTIFICATION is being issued upon request of Mr. Eric O. Echague for his application for fencing permit and whatever entered legal purpose/s it may serve him best.

Given This 20th day of June 2019 at Bgy. Poblacion 2. Coron,Palawan.

OSCAR A. AMIT JR.
Punong Barangay

CamScanner

F

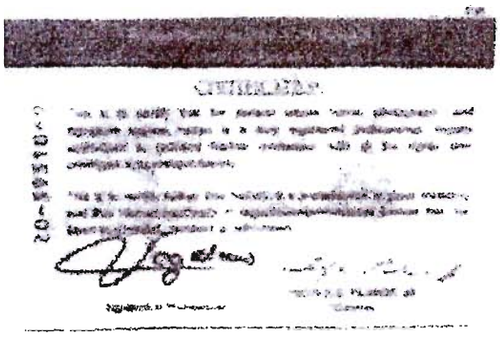

CamScanner

Accountable Form No. 51-C
Revised January, 1992

(ORIGINAL)

Official Receipt of the Republic of the Philippines

MTO-CORON

ERIC C. ECHA

Nº 2551912 L

October 20, 2022

301

Date

Agency

Fund

Payor

Nature of Collection	Account Code	Amount
		P 310.48
		P
Remarks:		
		310.48
Three Hundred Eighteen Pesos & Forty Eight Centavos Only		
TOTAL		P

Amount in Words

	Drawee Bank	Number	Date
☐ Cash			
☐ Check			
☐ Money Order			

MONEY V. CENTE G. ONACELAN
Acting Municipal Treasurer

Received the amount stated above.

Collecting Officer

NOTE: Write the number and date of this receipt on the back of check or money order received.

Accountable Form No. 51-C
Revised January, 1992

(ORIGINAL)

Official Receipt of the Republic of the Philippines

Nº 2551899 L

Date October 20, 2022

Agency MTO-CORON

Fund

Payor ERIC C. ECHAGUE

Nature of Collection	Account Code	Amount
		P
Remarks		
		1,275.00
TOTAL		P

Amount in Words

	Drawee Bank	Number	Date
☐ Cash			
☐ Check			
☐ Money Order			

Received the amount stated above.

Collecting Officer

NOTE: Write the number and date of this receipt on the back of check or money order received.

CamScanner